TI-PMLK

TI Power Management Lab Kit
Buck Experiment Book

Texas Instruments

SSQU007B
PMLKBuckEVM REV B

Texas Instruments

Name

University/Company name

Address

Phone

E-mail

Many people have collaborated with me in the realization of the TI-PMLK project, in different times, at different levels, in different ways. My sincerest thanks go to the Texas Instruments University Program Team and to the University of Salerno Power Electronics Laboratory Team.

Nicola Femia

Preface

Felix, qui potuit rerum cognoscere causas...
(Happy, he who could capture the origins of things...)
Publio Virgilio Marone, Mantova 70 B.C. – Brindisi 19 B.C.

Design is an exciting and fascinating art. Power electronics, for its interdisciplinarily nature, is a challenging field where the knowledge of *why* makes all the difference in understanding *how* to achieve design goals. The *will of learning* and the *means for learning* are the two basic ingredients needed to develop the virtuous ability to understand the reality of problems, to select the appropriate techniques and methods to solve them, to make meaningful design decisions and to intelligently evaluate the solutions.

The main purpose of the TI-PMLK collection of Experiment Books is to stimulate the spirit of investigation in students and practicing engineers who are engaged in learning and understanding the design of power supplies. The experiments cover a basic anthology of topics and issues encountered in the design of low power dc-dc non-isolated power supplies, such as power supplies topologies and characteristics, modes of operation, efficiency, control, stability, accuracy, transient response, noise, power magnetics, and more. The experiments can be performed by using the power supply boards of the TI-PMLK suite, which includes low dropout linear regulators and buck, boost and buck-boost switching regulators. The Experiment books are not intended to provide an exhaustive overview of design issues or definitive design hints: rather, it is meant to guide the reader into a multifaceted active learning experience.

All the experiments are based on a logical sequence of steps. They start with the *Case Study* section, which provides the description of the specific property or feature relevant to the power supply board to be used in the experiment, and illustrates the goal and the type of measurement to be done. The *Theory Background* section provides a short summary of concepts, models and equations, supporting the interpretation and understanding of the incoming experimental observations. The *Measurement Setup* section provides the instructions for connecting the instruments needed for the experiments to the board under test. Warnings are provided to prevent main mistakes. The *Test* section provides instructions on how to execute the measurements, and guidelines on how to analyze and understand the results of the measurements. Each test includes an *Answer* section, where the user is required to answer questions and to provide a discussion about the behavior of the board under test, relevant to the specific performance under investigation, based on the observation of the measurements results and on the application of concepts and properties illustrated through the various sections of the experiment. The *Discussion* section provides comments to achieve a better understanding of conceptual and practical correlations among system characteristics and operating performance. The final *Experimental Plots* section illustrates and discusses the results of some sample measurements.

Preface (cont.)

The experiments cover a variety of steady-state, transient and dynamic tests. The tests are mostly based on time domain measurements, while some tests focus on the investigation of dynamic properties that are described through frequency response functions, such as the power supply rejection ratio. This allows a user to conduct a complete experience on the characterization and understanding of power supply issues. Most of the experiments require basic laboratory equipment, including a power supply, some multi-meters, an oscilloscope and a load. Some tests require more sophisticated instrumentation, such as a dynamic source, a dynamic load, and a vector network analyzer, for best measurement.

The boards have been designed to allow the investigation of the influence of physical parameters and operating conditions of a power supply on its own performances. Various combinations of power and control components can be selected. Most of them yield operating conditions that fit good engineering standards. Other ones may lead to operating conditions typically undesired in industry applications, such as instability. Thus, the reader can achieve a sound understanding of such real phenomena.

Suggested combinations of power and control parts are provided for each experiment. The user is invited in some experiments to detect combinations that yield a certain operating condition or behavior. The user can select the setup of jumpers and connectors to generate a great variety of conditions. The book provides recommendations and warnings for safe board operation and for effective measurements. Before performing any experiment, the reader is strongly recommended to read carefully all the warnings and the introductory section of the book, where the specific description of the board is provided and information on settings and performance are given, including forbidden combinations and special operating conditions. The reader is also strongly invited to read the manufacturers' datasheets of all the parts mounted in the boards, especially the control chips, to improve the knowledge and the understanding of each device.

A good knowledge of the power supplies implemented on the boards, supported by the heuristic observations and the models and methods discussed in the book, help the user to distinguish what can be done from what cannot be done.

The level of detail and completeness of models discussed in the *Theory Background* section vary from experiment to experiment. Sometimes the models include certain specific properties, other times they are simplified or approximated. Achieving familiarity with models is a fundamental learning step: a good power supply designer has to be able to grade the importance of modeling certain properties, at device level as well as at system level, in order to assess if they really provide meaningful and influential information to meet the application requirements. Essential formulas and expressions for the basic analysis of the phenomenon under investigation are mostly introduced without step-by-step theoretical derivations, which are beyond the objectives of the book.

The reader is encouraged to test him(her)self in filling this gap, through an in-depth study of models and methods for the analysis and design of power supplies discussed in the cited references.

Preface (cont.)

The parameters of semiconductor and passive power components mounted on the boards are provided in the book to allow the application of analysis formulas and design equations. All parameters of power components are affected by uncertainty, due to tolerances, ageing and influence factors like temperature, current, voltage and frequency. The values collected in the books have been extracted from the manufacturers' datasheets in certain reference conditions. The power and control components and sub-circuits of integrated circuits controlling the power supplies, which determine modes of operation and performances, are subjected to the influence of temperature, voltage, current and frequency too. As a consequence, the predictions of formulas and equations provided in the book, based on the parameters of power and control devices, can show different levels of agreement with respect to the results of experimental measurements.

The user is strongly encouraged to read the references provided in the book, to analyze the characteristics and the behavior of integrated circuits and power components of the boards, and to verify if different values of the parameters of components can be used to achieve a better compliance between the results of formulas and the results of experimental measurements. The investigation of real device characteristics and of their influence on overall performance of a power supply is a fundamental component of designers' work.

The ultimate intention of this book is to accompany the reader through an active experience, made of observations, application of physics and mathematics, reality investigation and system level reasoning. That is engineering insight. The Author hopes the reader may fully enjoy this book and the pleasure of being a design engineer, a creative and autonomous thinker, able to acquire and re-elaborate the knowledge to win ever new design challenges.

Know why, know how!

Nicola Femia

Nicola Femia is Professor at the University of Salerno, Italy, where he teaches Power Electronics and Energetic Intelligence, in the Electronic Engineering and Computer Engineering Master Degree Programs. He leads the Power Electronics and Renewable Sources Laboratory. Over the past 25 years, he has promoted and directed worldwide university and industry research activities and education programs on power electronics, photovoltaic systems, and power design. He has been Visiting Professor at the Electrical Engineering Department of the Stanford University, Stanford, CA, where he taught Power Electronics Control and Energy Aware Design.

e-mail: *femia@unisa.it;*
web: *www.unisa.it/docenti/nicolafemia/index*

Table of Contents

Preface 7

Instrumentation needed for Experiments 13

TI-PMLK BUCK LM3475 description

- *Schematic* 16
- *Bill of Materials* 17
- *Board* 18
- *Connectors, Jumpers and Test Pins* 19

TI-PMLK BUCK TPS54160 description

- *Schematic* 20
- *Bill of Materials* 21
- *Board* 22
- *Connectors, Jumpers and Test Pins* 23

Notes, Warnings and Recommendations. 24

Experiment 1

Impact of operating conditions on efficiency. 25

Experiment 2

Impact of passive devices and switching frequency on current and voltage ripples 37

Experiment 3

Impact of cross-over frequency and passive devices on load transient response 49

Experiment 4

Impact of the inductor saturation on current and voltage ripples 61

Experiment 5

Impact of inductor characteristics on current limiting operation 73

Experiment 6

Switching frequency, ripple, offset and line immunization capabilities of hysteretic control 85

Appendix A

References 97

Appendix B

Manufacturers websites. 98

Instrumentation needed for experiments

The instrumentation recommended for the execution of the Experiments of this Book is comprised of:

- *DC power supply 0-50V/4A with dynamic voltage mode capability*
- *DC electronic load 20V/10A with dynamic current mode capability*
- *4 digital multimeters with 4 1/2-digit resolution*
- *250MHz 4-channels Digital Oscilloscope + 2 current probes 20A/50MHz*

The instrumentation used in the lab tests corresponding to the Experimental Plot samples shown in the book is comprised of:

- *TTi EX354RT Power Supply 0-70V/4A*
  (used in the experiments where the board under test had to be fed by a constant DC voltage source)
- *Keithley 2420 SourceMeter, 63V, 3.15A*
  (used in the experiments where the board under test had to be fed by a dynamic DC voltage source)
- *Sorensen Electronic Load SLM-4 mainframe + SLM series electronic load modules 60V/60A*
- *LeCroy waveRunner 44Xi 400MHz 4-channels Digital Oscilloscope,*
  with 2 Tektronix TCP 305 50A current probe + Tektronix TCP A300 amplifier

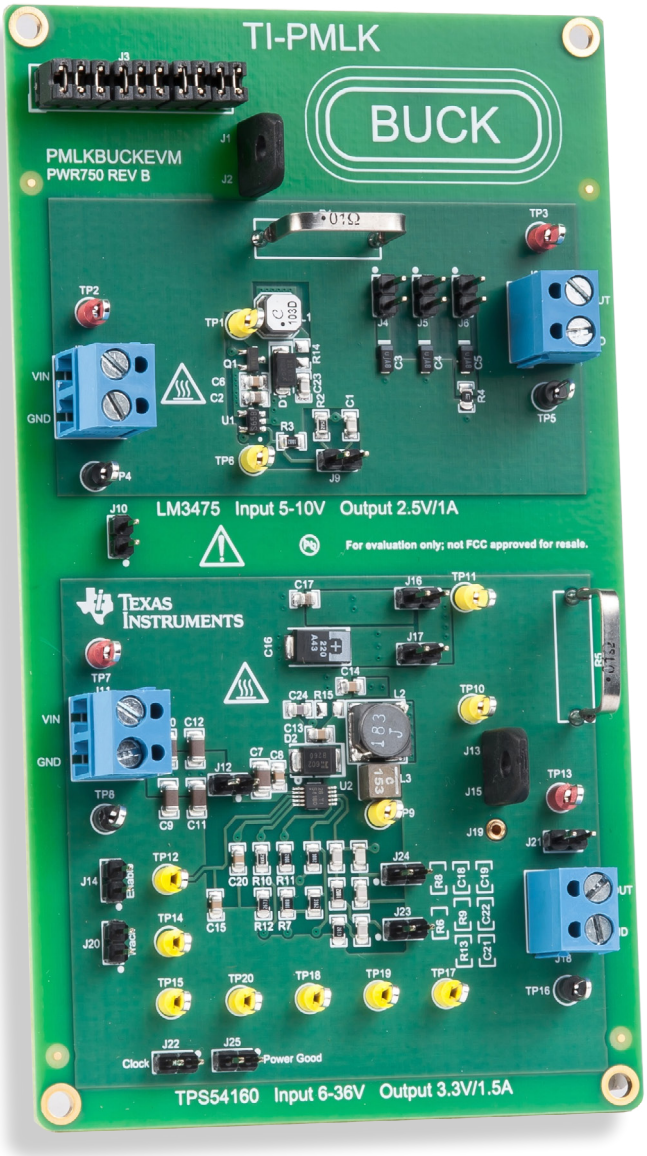

TI-PMLK-Buck

The TI-PMLK BUCK is an experimental power supply board based on two integrated step-down switching regulators, using the Hysteretic PFET Buck controller LM3475 and the step-down DC-DC converter with Eco-mode TPS54160

TI-PMLK LM3475 Schematic

The TI-PMLK LM3475 buck regulator accepts input voltages in between 5V and 10V, while regulating the output voltage at 2.5V with maximum load current of 1A.

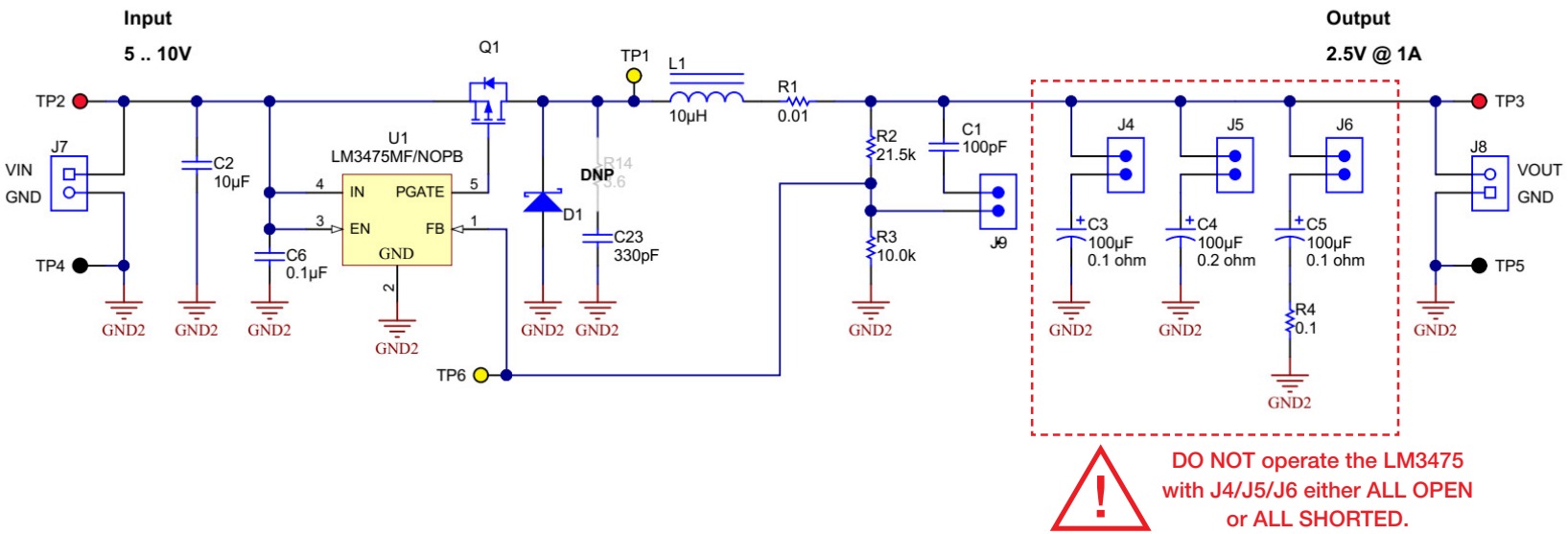

Figure 1. Circuit schematic of TI-PMLK LM3475 buck regulator

TI-PMLK LM3475 Bill of Materials

Designator	Description	Manufacturer	Part Number
C1	100pF Capacitor, 50V, C0G/NP0, 5%, 0805 SMD	Samsung EM	CL21C101JBANNNC
C2	10µF Capacitor, 16V, X5R, 10%, 0805 SMD	Taiyo Yuden	EMK212BJ106KG-T
C3, C5	100µF Tantulum Capacitor, 6V, 20%, 0.1Ω, SMD	Kemet	T527I107M006ATE100
C4	100µF Tantulum Capacitor, 4V, 20%, 0.2Ω, SMD	Kemet	T527I107M004ATE200
C6	0.1µF Capacitor, 50V, X7R, 10%, 0805 SMD	Yageo America	CC0805KRX7R9BB104
C23	330pF, Capacitor, 50V, C0G/NP0, 5%, 0805 SMD	Murata	GRM2165C1H331JA01D
D1	Schottky Diode, 20V, 2A, SMA SMD	Diodes Inc.	B220A-13-F
L1	10µH Inductor, Shielded Drum Core, Ferrite, 1.4A, 0.13Ω, SMD	Coilcraft	LPS5030-103MLB
Q1	P-Channel MOSFET, 30V, 4.6A, SOT-23 SMD	Vishay-Siliconix	SI2343CDS-T1-GE3
R1	0.01Ω Resistor, 1%, 3W	TT Electronics/IRC	OAR3R010FLF
R2	21.5kΩ Resistor, 1%, 0.125W, 0805 SMD	Vishay-Dale	CRCW080521K5FKEA
R3	10kΩ Resistor, 1%, 0.125W, 0805 SMD	Panasonic	ERJ-6ENF1002V
R4	0.1Ω Resistor, 1%, 0.25W, 0805 SMD	Bourns	CRM0805-FX-R100ELF
U1	LM3475MN Hysteretic PFET Buck Controller, 5-pin SOT-23 SMD	Texas Instruments	LM3475MF/NOPB

(*use the part numbers of components to retrieve, through the manufacturers websites listed in the references, details about parameters and data that are used in the formulae provided for calculations in each experiment*)

TI-PMLK LM3475 Board

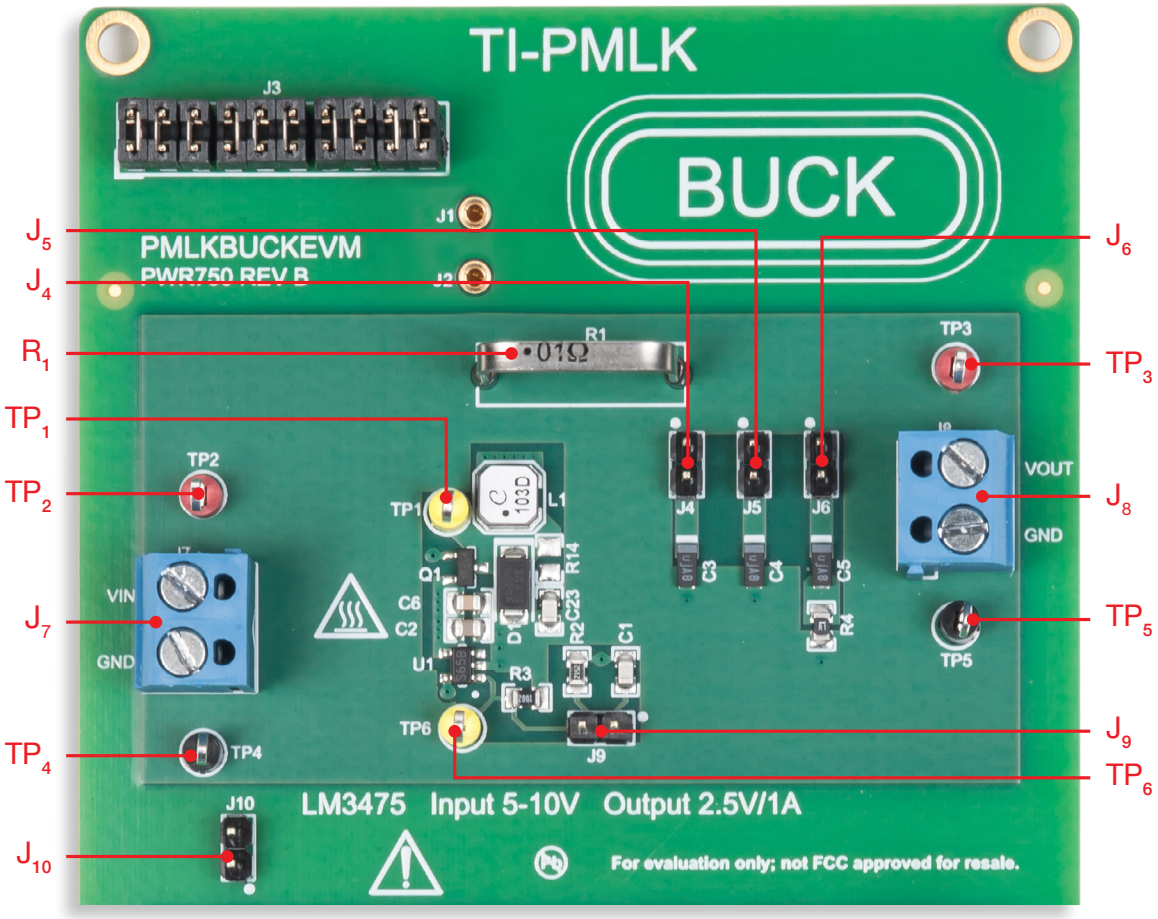

Figure 2. Plain view of TI-PMLK LM3475 buck regulator board

TI-PMLK LM3475 Connectors, Jumpers and Test Pins

Descriptors and functions for Connectors, Jumpers and Test Pins

Connectors

J_7 - input voltage screw drive connector
J_8 - output voltage screw drive connector

Jumpers

J_4 - connects C_3 (100µF,100mΩ) output capacitor
J_5 - connects C_4 (100µF,200mΩ) output capacitor
J_6 - connects C_5 (100µF,100mΩ) output capacitor in series with R_4 (100mΩ) resistor
J_9 - connects C_1 (100pF) switching frequency speed-up capacitor
J_{10} - connects grounds of LM3475 and TPS54160 board sections

Test pins

TP_1 - switching node voltage
TP_2 - positive pole of input voltage
TP_3 - positive pole of output voltage
TP_4 - ground pole of input voltage
TP_5 - ground pole of output voltage
TP_6 - feedback voltage

Voltage and Current Measurements

- hang a current probe to the shunt resistor R_1 to measure the inductor current
- use TP_2 and TP_4 to measure the input voltage
- use TP_3 and TP_5 to measure the output voltage
- use TP_1 and TP_4 to measure the switching node voltage
- use TP_6 and TP_4 to measure the feedback voltage
- hang a current probe to one of the external power wires connected to J_7 to measure the input current
- hang a current probe to one of the external power wires connected to J_8 to measure the load current

TI-PMLK TPS54160 Schematic

The TI-PMLK TPS54160 buck regulator accepts input voltages in between 6V and 36V, while regulating the output voltage at 3.3V with maximum load current of 1.5A.

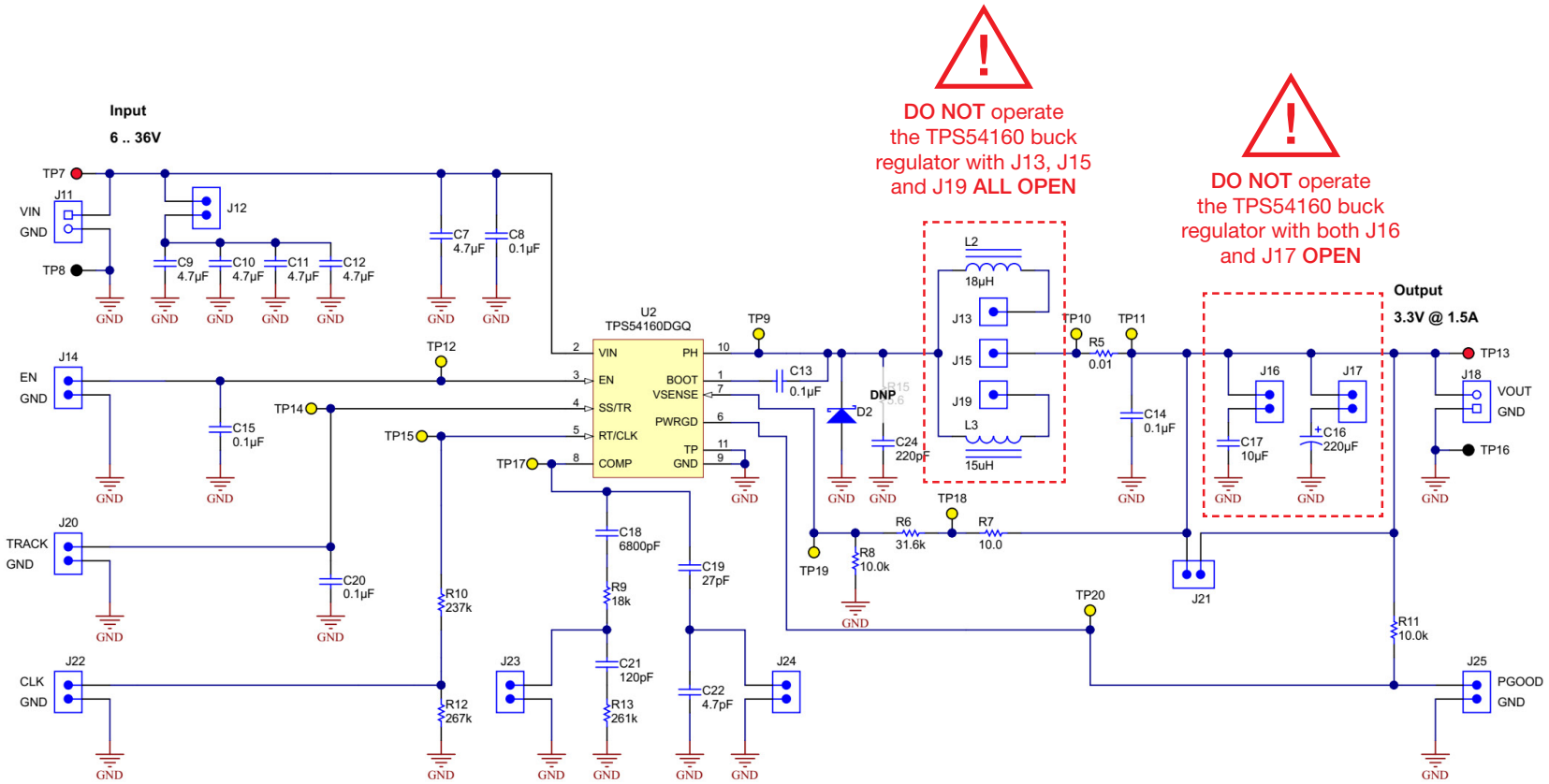

Figure 3. Circuit schematic of TI-PMLK TPS54160 buck regulator

TI-PMLK TPS54160 Bill of Materials

Designator	Description	Manufacturer	PartNumber
C7, C9, C10, C11, C12	4.7µF Capacitor, 50V, 10%, X7R, 1206 SMD	Taiyo Yuden	UMK316AB7475KL-T
C8, C13, C14, C15, C20	0.1µF Capacitor, 50V, 10%, X7R, 0805 SMD	Kemet	C0805C104K5RACTU
C16	220µF Tantulum Capacitor, 10V, 20%, 0.025Ω, SMD	Panasonic	10TPE220ML
C17	10µF Capacitor, 16V, X5R, 10%, 0805 SMD	Taiyo Yuden	EMK212BJ106KG-T
C18	6.8nF Capacitor, 50V, 5%, C0G/NP0, 0805 SMD	TDK	C2012C0G1H682J
C19	27pF Capacitor, 50V, 5%, C0G/NP0, 0805 SMD	MuRata	GQM2195C1H270JB01D
C21	120pF Capacitor, 50V, 5%, C0G/NP0, 0805 SMD	MuRata	GRM2165C1H121JA01D
C22	4.7pF Capacitor, 50V, 5%, C0G/NP0, 0805 SMD	AVX	08055A4R7CAT2A
C24	220pF Capacitor, 50V, 5%, C0G/NP0, 0805 SMD	Murata	GRM2165C1H221JA01D
D2	Schottky Diode, 60V, 2A, SMB, SMD	Diodes Inc.	B260-13-F
L2	18µH Inductor, Shielded Drum Core, Ferrite, 1.62A, 0.08Ω, SMD	Coilcraft	MSS7341-183MLB
L3	15µH Inductor, Shielded, Composite, 2.8A, 0.1Ω, SMD	Coilcraft	XAL4040-153ME
R5	0.01Ω Resistor, 1%, 3W	TT Electronics/IRC	OAR3R010FLF
R6	31.6kΩ Resistor, 1%, 0.125W, 0805 SMD	Vishay-Dale	CRCW080531K6FKEA
R7	10Ω Resistor, 1%, 0.125W, 0805 SMD	Vishay-Dale	CRCW080510R0FKEA
R8	10kΩ Resistor, 1%, 0.125W, 0805 SMD	Panasonic	ERJ-6ENF1002V
R9	18kΩ Resistor, 5%, 0.125W, 0805 SMD	Yageo	RC0805FR-0718KL
R10	237kΩ Resistor, 1%, 0.125W, 0805 SMD	Vishay-Dale	CRCW0805237KFKEA
R11	10kΩ Resistor, 1%, 0.125W, 0805 SMD	Panasonic	ERJ-6ENF1002V
R12	267kΩ Resistor, 1%, 0.125W, 0805 SMD	Vishay-Dale	CRCW0805267KFKEA
R13	261kΩ Resistor, 1%, 0.125W, 0805 SMD	Vishay-Dale	CRCW0805261KFKEA
U2	TPS54160 Buck Regulator, 3.5 to 60V Input, 10-Pin MSOP SMD	Texas Instruments	TPS54160DGQ

(*use the part numbers of components to retrieve, through the manufacturers websites listed in the references, details about parameters and data that are used in the formulae provided for calculations in each experiment*)

TI-PMLK TPS54160 Board

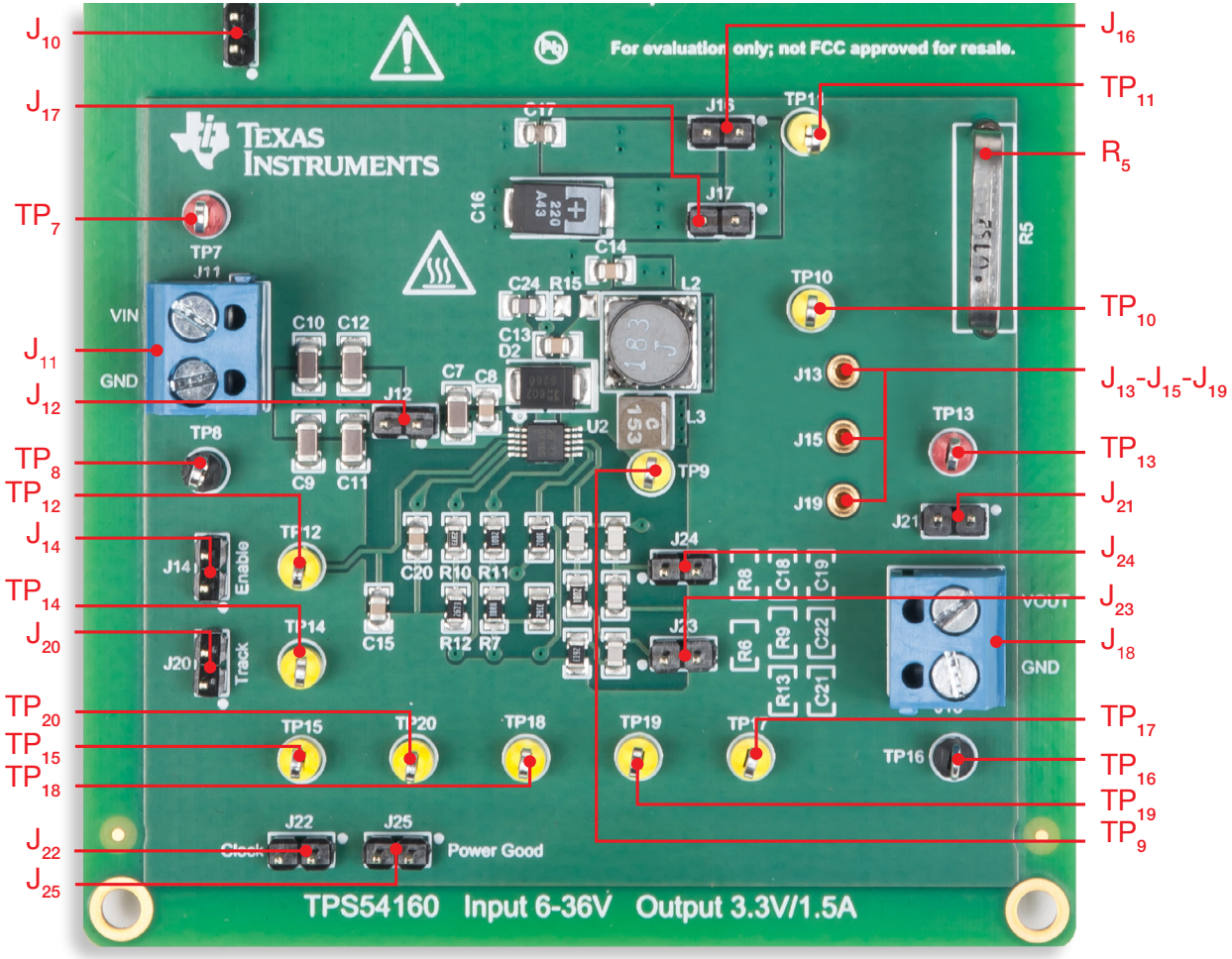

Figure 4. Plain view of TI-PMLK TPS54160 buck regulator board

TI-PMLK TPS54160 Connectors, Jumpers and Test Pins

Descriptors and functions for Connectors, Jumpers and Test Pins

Connectors

J_{11} - input voltage screw drive connector
J_{18} - output voltage screw drive connector

Jumpers

J_{10} - connects grounds of the TPS54160 and LM3475 board sections
J_{12} - connects C_9-C_{12} (4x4.7µF) input capacitors
J_{14} - connects to external enable signal
J_{16} - connects C_{17} (10µF) output capacitor
J_{17} - connects C_{16} (220µF) output capacitor
J_{20} - connects to external soft-start signal
J_{21} - connects the output voltage to the voltage sensor R_6-R_8 through a lower impedance trace
J_{22} - switching frequency setup:
shorted → f_s = 500kHz , open → f_s = 250kHz
J_{23} - by-passes the C_{21} and R_{13} parts and modifies the error amplifier gain
J_{24} - by-passes the C_{22} part and modifies the error amplifier gain
J_{25} - power good signal

High current jumpers

J_{13}-J_{15} - connects inductor L_2 (ferrite core, 18µH)
J_{15}-J_{19} - connects inductor L_3 (powdered core, 15µH)

Test pins

TP_7 - positive pole of input voltage
TP_8 - ground pole of input voltage
TP_9 - switching node voltage
TP_{10} - can be used together with TP_{11} to sense the inductor current through the voltage across the resistor R_5 (10mΩ). The shunt resistor R_5 allows to hang a current probe for inductor current measurement
TP_{11} - can be used together with TP_{10} to sense the inductor current through the voltage across the resistor R_5 (10mΩ)
TP_{12} - enable voltage
TP_{13} - positive pole of output voltage
TP_{14} - soft-start voltage
TP_{15} - PWM ramp voltage
TP_{16} - ground pole of output voltage
TP_{17} - control voltage
TP_{18} - connection pin for loop gain measurements. It can be used together with TP_{11} to inject the ac stimulus into the 10Ω resistor R_7
TP_{19} - feedback voltage
TP_{20} - power good signal

Voltage and Current Measurements

- hang a current probe to the shunt resistor R_5 to measure the inductor current
- use TP_7 and TP_8 to measure the input voltage
- use TP_{13} and TP_{16} to measure the output voltage
- use TP_9 and TP_{16} to measure the switching node voltage
- use TP_{17} and TP_{16} to measure the control voltage
- hang a current probe to one of the external power wires connected to J_{11} to measure the input current
- hang a current probe to one of the external power wires connected to J_{18} to measure the load current

Notes, Warnings and Recommendations

NOTES

- The ceramic capacitors C_7 and C_8 by-pass the high-frequency component of the current circulating through the FET (internal to TPS54160 chip U_2) and the rectifier D_2. For input ripple analysis, the 0.1μF capacitance of capacitor C_8 can be neglected.
- The 0.1μF ceramic capacitor C_{14} by-passes the high-frequency steep front component of the output current determined by extremely fast load transients. Its small capacitance can be neglected. Its low ESR has the effect of reducing the equivalent ESR of the output capacitors, thus making the output voltage overshoot during load transients mostly dependent on the equivalent capacitance.
- The compensation setting with both **J_{23} and J_{24} shorted** is tailored for C_{out}=C_{17}=10μF, whereas the compensation with both **J_{23} and J_{24} open** is tailored for C_{out}=C_{16}=220μF. In both cases the loop gain has about 45° phase margin at 15kHz cross-over frequency with 36V input voltage and 1.5A load current.
- When C_{out}=C_{16} is used with **J_{23} and J_{24} shorted** the regulator is still stable, but the crossover is de-rated down to about 2kHz with 60° phase margin. When C_{out}=C_{17} is used with **J_{23} and J_{24} open** the regulator is unstable, and the output voltage shows large oscillations around 3.3V.
- Other combinations of capacitors **C_{16}** and **C_{17}** and jumpers **J_{23}** and **J_{24}** can lead whether to stable or to unstable operation depending on the input voltage and load current. The formulas provided in the *Theory Background* section of *Experiment 3* can be used to predict the stability. It is recommended to limit the operation of the regulator in unstable conditions only to a very short interval of time (few seconds), enough to capture the instability into an oscilloscope screen-shot.
- A resistor R_{14} with 3.6Ω resistance can be mounted in series to capacitor C_{23} in the LM3475 buck regulator to achieve the switching node voltage damping.
- A resistor R_{15} with 5.6Ω resistance can be mounted in series to capacitor C_{24} in the TPS54160 buck regulator to achieve the switching node voltage damping.

WARNINGS AND RECOMMENDATIONS

GENERAL

1) **DO NOT** exceed maximum input voltage ratings
2) **DO NOT** exceed maximum load current, unless it is required in the experiment
3) If the board is terminated in the output into an electronic load in constant current mode, the sequence to follow is:
   a) at the turn on: turn on the input power supply then turn on the load
   b) at the turn off: turn off the load then turn off the input power supply
4) Whatever change in the setup of jumpers has to be done, the board has to be shut down (turn OFF the “LOAD ON” and “OUT ON” buttons of electronic load and power supply respectively)
5) **DO NOT** operate the regulators in unstable conditions for more than few seconds
6) The board has to be operated at ambient temperature **25°C** (maximum **27.5°C)**

TPS54160 BUCK REGULATOR

1) **DO NOT** operate the regulator with both **J_{16} AND J_{17} OPEN**
2) **DO NOT** operate the regulator with both **J_{13}-J_{15} AND J_{15}-J_{19} OPEN**

LM3475 BUCK REGULATOR

1) **DO NOT** operate the regulator with **J_4 AND J_5 AND J_6 ALL OPEN**
2) **DO NOT** operate the regulator with **J_4 AND J_5 AND J_6 ALL SHORTED**

Experiment 1

The goal of this experiment is to investigate how the efficiency of a buck regulator depends on the line and load conditions and on the switching frequency. The TPS54160 buck regulator is used for this experiment.

Case Study

The goal of this experiment is to analyze the influence of line voltage, load current and switching frequency on the buck regulator efficiency.

The subject of investigation in this experiment is the efficieny of the buck regulator. Figure 1 shows a simplified schematic of the TPS54160 buck regulator with the main power devices highlighted:

- the input capacitor C_{in} (comprised of capacitors C_9 to C_{12} in parallel as shown in the TI-PMLK TPS54160 schematic);
- the inductor L ($L=L_2=18\mu H$ or $L=L_3=15\mu H$ depending on jumpers J_{13}, J_{15} and J_{19} set-up, as shown in the TI-PMLK TPS54160 schematic);
- the output capacitor C_{out} ($C_{out}=C_{16}=10\mu F$ or $C_{out}=C_{17}=220\mu F$ depending on jumpers J_{16} and J_{17} set-up, as shown in the TI-PMLK TPS54160 schematic);
- the diode (diode D_2 in the TI-PMLK TPS54160 schematic);
- the N-channel MOSFET (it is integrated in the TPS54160 chip, with drain and source connected respectively to VIN and PH pins).

The converter efficiency is mainly influenced by the MOSFET, the diode and the inductor power losses. The formulae shown in the *Theory Background* section highlight that the power losses change with the operating conditions. The main influence factors are:

- the line voltage V_{in}
- the output voltage V_{out}
- the load current I_{out}
- the switching frequency $f_s=1/T_s$.

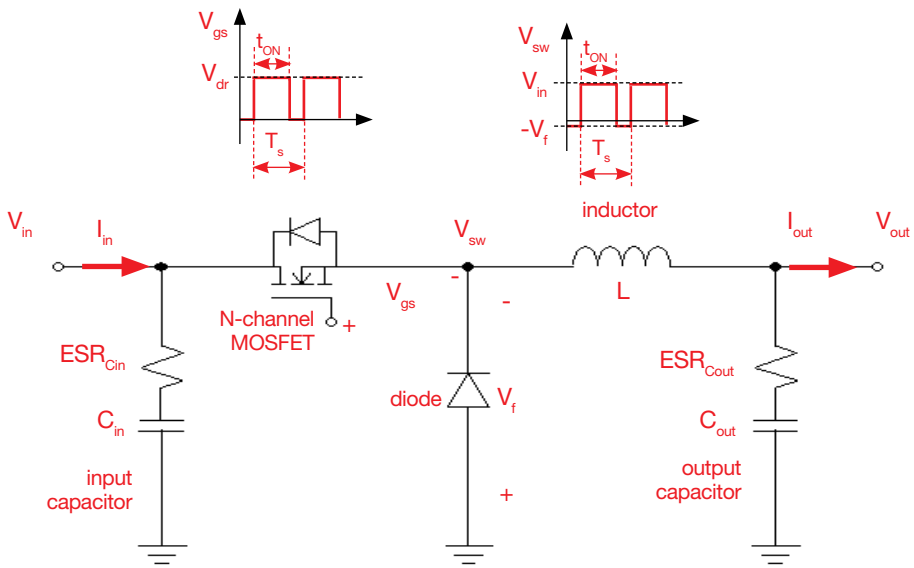

Figure 1. Buck converter simplified schematic

Test#1. We measure the input voltage V_{IN}, the input current $I_{IN,}$ the output voltage V_{OUT} and the output current I_{OUT} of the TPS54160 buck regulator while varying the load current. We calculate the experimental efficiency, we calculate the theoretical efficiency, and we observe how they compare with each other and how they change with the load current and line voltage at a switching frequency of 250kHz.

Test#2. We measure the input voltage V_{IN}, the input current $I_{IN,}$ the output voltage V_{OUT} and the output current I_{OUT} of the TPS54160 buck regulator while varying the load current. We calculate the experimental losses, we calculate the theoretical losses, and we observe how they compare with each other and how they change with the load current and line voltage at a switching frequency of 500kHz.

Theory Background

The power losses of switching regulators are influenced by the operating parameters of the circuit and by the physical parameters of the power devices. The formulae provided below can be used for a simplified calculation of the main losses of a buck regulator operating in Continuous Conduction Mode operation [1]. *(See [1][3] for more details on dc-dc switching converters operation and analysis in continuous and discontinuos mode of operation, see [3] for more details on MOSFETs losses analysis and [5] for more details on TPS54160 operation and features)*

Loss Formulae

MOSFET [2]

Conduction: $P_{MOS,c} = R_{ds} D I_{out}^2 \alpha_{pp}$

Switching: $P_{MOS,sw} = V_{in} I_{out} f_s t_{sw}$

Gate: $P_{MOS,g} = Q_g V_{dr} f_s$

Current sensing

IC current sense: $P_{sns} = R_{sns} D I_{out}^2 \alpha_{pp}$

Diode

Conduction: $P_{diode} = V_f D' I_{out}$

Inductor [3] [4]

Winding: $P_{L,w} = ESR_L I_{out}^2 \alpha_{pp}$

Core: $P_{L,c} = K_1 f_s^x (K_2 \Delta i_{pp})^y$

Capacitors [5]

Input: $P_{Cin} = ESR_{Cin} I_{out}^2 D' D$

Output: $P_{Cout} = \frac{1}{12} ESR_{Cout} \Delta i_{pp}^2$

Other [6]

IC bias: $P_{IC} = V_{in} I_{\mu}$

Definitions

T_s = switching period

t_{ON} = MOSFET conduction time

$f_s = 1/T_s$ = switching frequency

D = MOSFET duty-cycle

$= t_{ON} / T_s = V_{out} / V_{in}$ [7]

D' = 1-D

R_{ds} = MOSFET channel resistance

Q_g = MOSFET gate charge

t_{sw} = MOSFET switching time

V_f = diode forward voltage

L = inductor inductance

ESR_L = inductor series resistance

ESR_{Cin} = input capacitor series resistance

ESR_{Cout} = output capacitor series resistance

I_{μ} = controller quiescent current

V_{dr} = MOSFET gate driver voltage

Δi_{pp} = inductor current ripple

$= V_{out} D' / (f_s L)$

α_{pp} = inductor ripple factor

$= 1 + (\Delta i_{Lpp} / I_{out})^2 / 12$

Good to know

(1) The buck converter operates in continuous conduction mode if $2 L f_s I_{OUT} > (1-D) V_{OUT}$

(2) The MOSFET parameters $\mathbf{R_{ds}}$, $\mathbf{t_{sw}}$ and $\mathbf{Q_g}$ are influenced by the gate driver voltage $\mathbf{V_{dr}}$, the junction temperature $\mathbf{T_j}$, the input voltage $\mathbf{V_{in}}$ and the output current $\mathbf{I_{out}}$.

(3) The inductor parameters $\mathbf{K_1}$, $\mathbf{K_2}$, **x**, **y** depend on the core material and size, on the switching frequency $\mathbf{f_s}$ and on the temperature.

(4) f_s is in kHz, Δi_{pp} is in Amps, $P_{L,c}$ is in mW.

(5) In case of capacitors in parallel the **rms** current passing through each capacitor should be determined.

(6) Additional losses depending on parasitic resistances of PCB layout and on ancillary parts should be also considered for more accurate efficiency calculation.

(7) The real value of the duty-cycle D is greater than the theoretical ratio V_{out} / V_{in} because of the increase of inductor energy charge needed to compensate the power losses of the converter.

(8) You can measure exprimentally the duty-cycle D by analyzing the waveform of the **switching node voltage $\mathbf{V_{sw}}$** (test pin TP_9 in TPS54160 board): this is a square-wave staying at the input voltage level for the time t_{ON}, while the MOSFET is ON, and at the voltage $-V_f$ for the time $t_{OFF} = T_s - t_{ON}$, while the MOSFET is OFF. Then, by measuring t_{ON} and T_s you can obtain the duty-cycle D based on the formula given in the *Definitions*.

Experiment set-up: configuration

The instruments needed for this experiment are: a DC POWER SUPPLY, four MULTIMETERS, an OSCILLOSCOPE and a DC ELECTRONIC LOAD. Figure 2 shows the instruments connections. Follow the instructions provided in next page to set-up the connections.

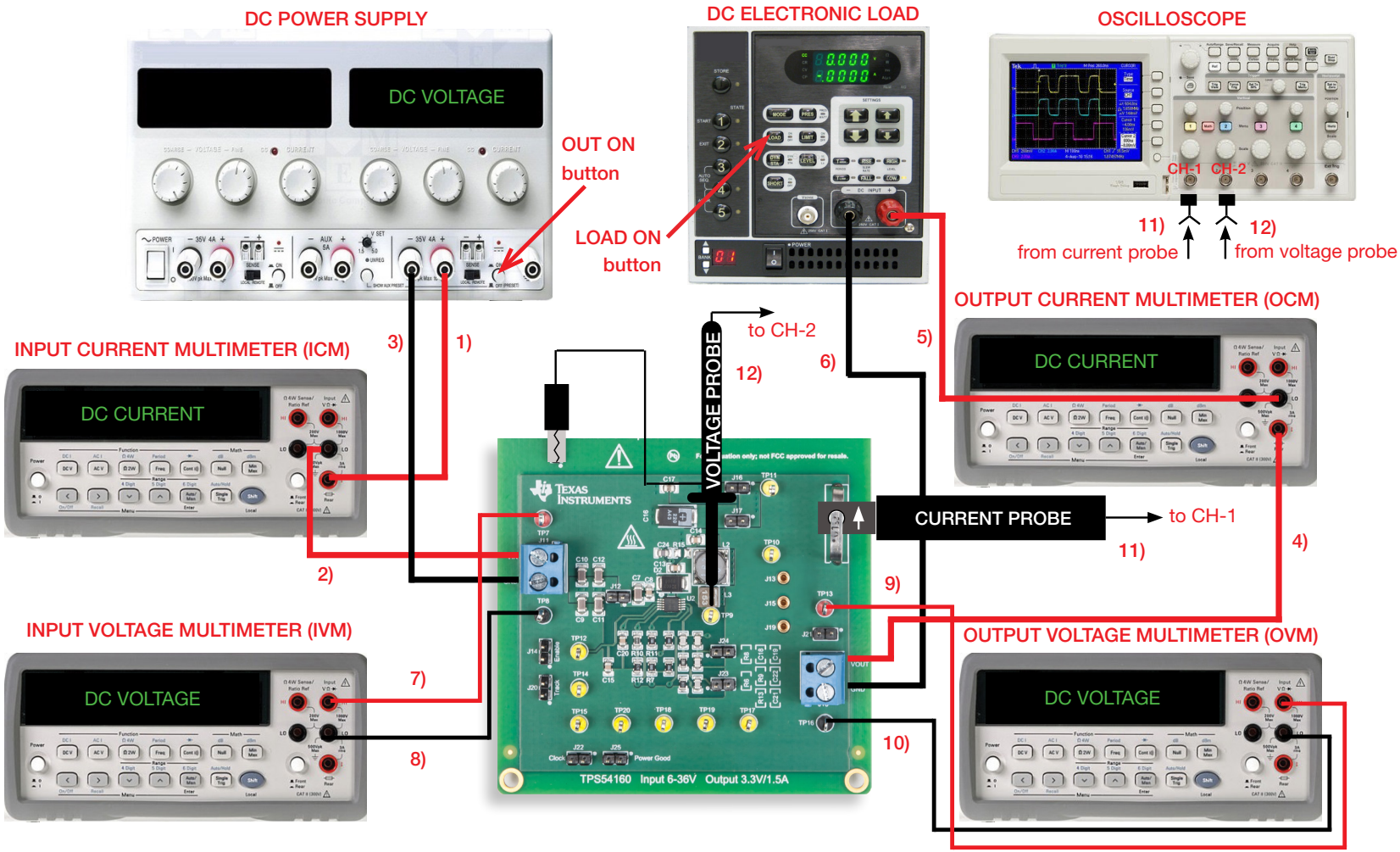

Figure 2. Experiment set-up.

Experiment set-up: instructions

With all the instruments turned off, make the following connections:

1) connect the POSITIVE (RED) OUTPUT of the DC POWER SUPPLY to the POSITIVE (RED) CURRENT INPUT of the INPUT CURRENT MULTIMETER (ICM)
[WARNING: the positive current input of the MULTIMETER is distinguished from the positive voltage input]

2) connect the NEGATIVE (BLACK) CURRENT INPUT of the INPUT CURRENT MULTIMETER (ICM) to the INPUT (VIN) of the J_{11} screw terminal of the TPS54160 buck regulator

3) connect the NEGATIVE (BLACK) OUTPUT of the DC POWER SUPPLY to the GROUND (GND) of the J_{11} screw terminal of the TPS54160 buck regulator

4) connect the OUTPUT (VOUT) of the J_{18} screw terminal of the TPS54160 buck regulator to the POSITIVE (RED) CURRENT INPUT of the OUTPUT CURRENT MULTIMETER (OCM)
[WARNING: the positive current input of the MULTIMETER is distinguished from the positive voltage input]

5) connect the NEGATIVE (BLACK) CURRENT INPUT of the OUTPUT CURRENT MULTIMETER (OCM) to the POSITIVE (RED) INPUT of the ELECTRONIC LOAD.

6) connect the NEGATIVE (BLACK) INPUT of the ELECTRONIC LOAD to the GROUND (GND) of the J_{18} screw terminal of TPS54160 buck regulator

7) connect the POSITIVE (RED) VOLTAGE INPUT of the INPUT VOLTAGE MULTIMETER (IVM) to the TEST PIN TP_7 which is the VIN of the TPS54610 buck regulator

8) connect the NEGATIVE (BLACK) VOLTAGE INPUT of the INPUT VOLTAGE MULTIMETER (IVM) to the TEST PIN TP_8 which is GND of the TPS54610 buck regulator

9) connect the POSITIVE (RED) VOLTAGE INPUT of the OUPUT VOLTAGE MULTIMETER (OVM) to the TEST PIN TP_{13} which is VOUT of the TPS54610 buck regulator

10) connect the NEGATIVE (BLACK) VOLTAGE INPUT of the OUTPUT VOLTAGE MULTIMETER (OVM) to the TEST PIN TP_{16} which is GND of the TPS54610 buck regulator

11) connect a current probe to channel 1 of the OSCILLOSCOPE and hang it on the sensing resistor R_5 of the TPS54160 buck regulator, ensuring that the arrow printed on the probe clamps corresponds to the current that exits the inductor (the arrow must point upside when looking the TPS54160 buck board frontally)

12) connect a voltage probe to channel 2 of the OSCILLOSCOPE and hang it on the TEST PIN TP_9 which is the switching node voltage of the TPS54160 buck regulator

Test#1: preparation and procedure

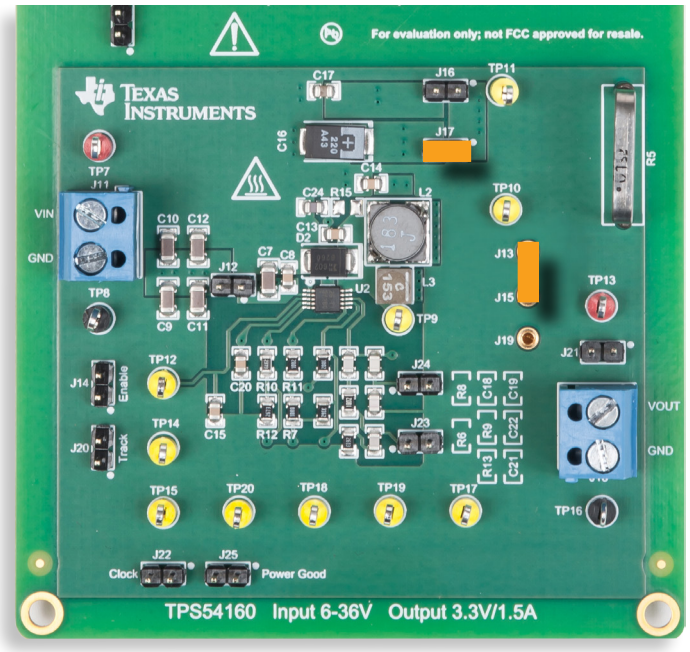

Figure 3. TPS54160 buck board: jumpers set-up for Test#1

Jumpers set-up (see Figure 3):

- J_{13}-J_{15} **shorted** → L_2 (18μH, ferrite) inductor connected
- J_{17} **shorted** → C_{16} (220μF) output capacitor connected
- J_{14} **open** → internal signal enabled
- J_{20} **open** → internal soft-start signal enabled
- J_{21} **open** → output capacitors connected to the voltage sensor R_6-R_8
- J_{12} **open** → C_9-C_{12}(4x4.7μF) input capacitors disconnected
- J_{16} **open** → C_{17} (10μF) output capacitor disconnected
- J_{22} **open** → switching frequency f_s = 250kHz
- J_{25} **open** → power good signal enabled
- J_{23} **AND** J_{24} **open** → compensation set-up for C_{16} (220μF) output capacitor

Test Procedure:

1) turn on the MULTIMETERS, set the ICM in DC CURRENT MODE, the OCM in DC CURRENT MODE, the IVM in DC VOLTAGE MODE, and the OVM in DC VOLTAGE MODE
2) turn on the OSCILLOSCOPE, set the CH-1 in DC 50Ω coupling mode, set the channel 2 in DC 1MΩ coupling mode, select CH-2 as trigger source, and execute the "de-gauss" of the current probe to remove possible DC bias in the current probe
3) turn on the DC POWER SUPPLY (ensure that the "OUT ON" button is OFF), set the voltage value at 6V, and set the CURRENT LIMIT at 1A
4) turn on the ELECTRONIC LOAD (be sure that the "LOAD ON" button is OFF), set the ELECTRONIC LOAD in CONSTANT CURRENT MODE , and set the current at 1A
5) turn ON the "OUT ON" button of the DC POWER SUPPLY. Under these conditions you should read about 6V in the IVM display, about 3.3V in the OVM display, about 0A in the OCM display and 0A in the ICM display, and see the load current on CH-1 trace of the OSCILLOSCOPE as flat horizontal line with 0A average value and the switching node voltage on CH-2 trace as a square-wave swinging between the input voltage and a slightly negative voltage. (If the values you read or the waveforms you see do not look as described above, turn OFF the "OUT ON" button of the DC POWER SUPPLY and verify the previous steps).
6) turn ON the "LOAD ON" button of the ELECTRONIC LOAD. Under these conditions you should read about 6V in the IVM display, about 3.3V in the OVM display, 1A in the OCM display, about 600mA in the ICM display, and a triangular waveshape with 1A average value on CH-1 of the OSCILLOSCOPE. (If the values are much different than the ones listed above, turn OFF the "LOAD ON" button of the ELECTRONIC LOAD and the "OUT ON" button of the DC POWER SUPPLY and verify the setup)
7) read the output voltage and the input current on the OVM display and ICM display respectively, measure the inductor ripple current on CH-1 of the OSCILLOSCOPE, measure the frequency and duty-cycle of the switching node voltage on CH-2 of the OSCILLOSCOPE, use these values for the calculations required in Table 1. Repeat this step for all the load current and input voltage values listed in Table 1. (You do not need to turn OFF the "OUT ON" button of the DC POWER SUPPLY while changing the input voltage and the load current)
8) at the end of the measurements, turn OFF the "LOAD ON" button of the ELECTRONIC LOAD and the "OUT ON" button of the DC POWER SUPPLY, then switch off all the instruments

Test#1: measure and calculate

1) Calculate the experimental efficiency of the converter by means of the formula $\eta_{exp} = V_{out}I_{out} / V_{in}I_{in} \times 100$, using the measured values of V_{out}, I_{out}, V_{in} and I_{in}.
2) Calculate the theoretical losses of the power converter as $P_{loss} = P_{MOS,c} + P_{MOS,sw} + P_{MOS,g} + P_{diode} + P_{L,w} + P_{L,c} + P_{Cin} + P_{Cout} + P_{IC}$ by means of the *Loss Formulae* provided in the *Theory Background* section. [**NOTE**: $P_{MOS,c} = P_{sns}$ in TPS54160 buck regulator, as the MOSFET channel resistance is used as sensing resistance]
3) Calculate the theoretical efficiency of the converter by means of the formula $\eta_{theo} = P_{out} / (P_{out} + P_{loss}) \times 100$, where $P_{out} = V_{out} I_{out}$.
4) Collect the measurement and calculation results in Table 1, analyze the results, answer the questions and try to motivate the results of your observation by considering the loss formulae and the information provided in the *Theory Background* section.

Table 1. Experimental vs theoretical efficiency of TI-PMLK TPS54160 buck regulator operating with switching frequency f_s = 250kHz.

(1) experimental efficiency [%] $\eta_{exp} = (V_{OUT}I_{OUT})/(V_{IN}I_{IN}) \times 100$	I_{OUT} [mA]					
(2) theoretical efficiency [%] $\eta_{theo} = P_{OUT}/(P_{OUT}+P_{LOSS}) \times 100$	100	200	500	1000	1200	1500
V_{IN} = 6V	(1)	(1)	(1)	(1)	(1)	(1)
	(2)	(2)	(2)	(2)	(2)	(2)
V_{IN} = 24V	(1)	(1)	(1)	(1)	(1)	(1)
	(2)	(2)	(2)	(2)	(2)	(2)

MOSFET (TPS54160)
R_{ds}=180mΩ,
Q_g=3nC, α_{sw}=0.25ns/V,
$t_{sw}=\alpha_{sw}V_{IN}$
V_{dr}=6V

Current sensing
$R_{sns}=R_{ds}$

IC
Iμ=116μA

Rectifier
V_f = 350mV@0.1A
V_f = 550mV@1.5A

Inductor (J_{13}-J_{15} sh)
$L=L_2$=18μH
ESR_L=80mΩ
K_1=0.261, K_2=0.92,
x=1.21, y=2.01

Input capacitor (J_{12} op)
$C_{in}=C_7$=4.7μF
ESR=5mΩ

Output capacitor (J_{16} op, J_{17} sh)
$C_{out}=C_{16}$=220μF
ESR=25mΩ

Answer:

1. Identify the devices that are responsible for efficiency decrease at low load and high load: _____

2. For the input voltage values of the test, determine the value of the load current corresponding to maximum efficiency and verify the prediction with measurement [Hint: use the derivative of the losses as a function of the load current]: _____

Test#2: preparation and procedure

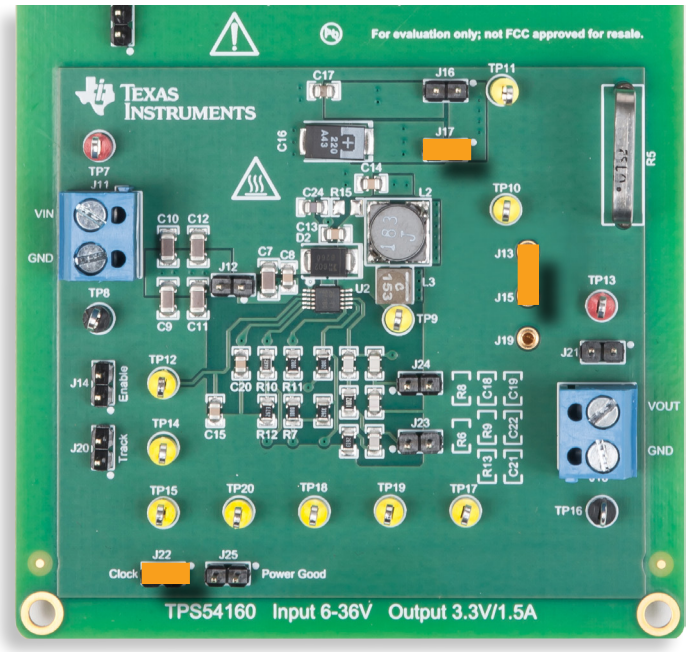

Figure 4. TPS54160 buck board: jumpers set-up for Test#2

Jumpers set-up (see Figure 4):

- J_{13}-J_{15} **shorted** → L_2 (18μH, ferrite) inductor connected
- J_{17} **shorted** → C_{16} (220μF) output capacitor connected
- J_{14} **open** → internal signal enabled
- J_{20} **open** → internal soft-start signal enabled
- J_{21} **open** → output capacitors connected to the voltage sensor R_6-R_8
- J_{12} **open** → C_9-C_{12}(4x4.7μF) input capacitors disconnected
- J_{16} **open** → C_{17} (10μF) output capacitor disconnected
- J_{22} **shorted** → switching frequency f_s = 500kHz
- J_{25} **open** → power good signal enabled
- J_{23} **AND** J_{24} **open** → compensation set-up for C_{16} (220μF) output capacitor

Test Procedure:

1) turn on the MULTIMETERS, set the ICM in DC CURRENT MODE, the OCM in DC CURRENT MODE, the IVM in DC VOLTAGE MODE, and the OVM in DC VOLTAGE MODE
2) turn on the OSCILLOSCOPE, set the CH-1 in DC 50Ω coupling mode, set the CH-2 in DC 1MΩ coupling mode, select CH-2 as trigger source and execute the "de-gauss" of the current probe (this removes possible dc bias in the current probe)
3) turn on the DC POWER SUPPLY (be sure that the “OUT ON” button is OFF), set the voltage value at 6V, and set the CURRENT LIMIT at 1A
4) turn on the ELECTRONIC LOAD (be sure that the “LOAD ON” button is OFF), set the ELECTRONIC LOAD in CONSTANT CURRENT MODE, and set the current at 1A
5) turn ON the DC POWER SUPPLY “OUT ON” button. Under these conditions you should read about 6V in the IVM display, about 3.3V in the OVM display, about 0A in the OCM display and 0A in the ICM display, and see the load current on CH1 trace of the OSCILLOSCOPE as flat horizontal line with 0A average value and the switching node voltage on CH-2 trace as a square-wave swinging between the input voltage and a slightly negative voltage. (If the values you read or the waveforms you see do not look as described above, turn OFF the “OUT ON” button of the DC POWER SUPPLY and verify the previous steps).
6) turn ON the “LOAD ON” button of the ELECTRONIC LOAD. Under these conditions you should read about 6V in the IVM display, about 3.3V in the OVM display, 1A in the OCM display, about 600mA in the ICM display, and a triangular waveshape with 1A average value on CH-1 of the OSCILLOSCOPE. (If the values are much different than the ones listed above, turn OFF the “LOAD ON” button of the ELECTRONIC LOAD and the “OUT ON” button of the DC POWER SUPPLY and verify the setup)
7) read the output voltage and the input current on the OVM display and ICM display respectively, measure the inductor ripple current on CH-1 of the OSCILLOSCOPE, measure the frequency and duty-cycle of the switching node voltage on CH-2 of the OSCILLOSCOPE, use these values for the calculations required in Table 2. Repeat this step for all the load current and input voltage values listed in Table 2. (You do not need to turn OFF the “OUT ON” button of the DC POWER SUPPLY and the “LOAD ON” button of the ELECTRONIC LOAD while changing the input voltage and the load current)
8) at the end of the measurements, turn OFF the “LOAD ON” button of the ELECTRONIC LOAD and the “OUT ON” button of the DC POWER SUPPLY, then switch off all the instruments

Test#2: measure and calculate

1) Calculate the experimental losses of the converter by means of the formula $P_{exp} = V_{in}I_{in} - V_{out}I_{out}$, using the measured values of V_{out}, I_{out}, V_{in} and I_{in}.
2) Calculate the total losses of the power converter as $P_{loss} = P_{MOS,c} + P_{MOS,sw} + P_{MOS,g} + P_{diode} + P_{L,w} + P_{L,c} + P_{Cin} + P_{Cout} + P_{IC}$ by means of the *Loss Formulae* provided in the *Theory Background* section. [**NOTE**: $P_{MOS,c} = P_{sns}$ in TPS54160 buck regulator, as the MOSFET channel resistance is used as sensing resistance]
3) Collect the measurement and calculation results in Table 2, analyze and compare them with the results collected in Table 1, answer the questions and try to motivate the results of your observation by considering the loss formulae and the information provided in the *Theory Background* section.

Table 2. Experimental vs theoretical power losses of TI-PMLK TPS54160 buck regulator operating with switching frequency f_s = 500kHz.

(1) experimental losses [mW] $P_{exp} = V_{IN}I_{IN} - V_{OUT}I_{OUT}$	I_{OUT} [mA]					
(2) calculated losses [mW] $P_{loss} = P_{MOS,c} + P_{MOS,sw} + P_{MOS,g} + P_{diode} + P_{L,w} + P_{L,c} + P_{Cin} + P_{Cout} + P_{IC}$	100	200	500	1000	1200	1500
V_{IN} = 6V	(1)	(1)	(1)	(1)	(1)	(1)
	(2)	(2)	(2)	(2)	(2)	(2)
V_{IN} = 24V	(1)	(1)	(1)	(1)	(1)	(1)
	(2)	(2)	(2)	(2)	(2)	(2)

MOSFET (TPS54160)
R_{ds}=180mΩ,
Q_g=3nC, α_{sw}=0.25ns/V,
$t_{sw}=\alpha_{sw}V_{IN}$
V_{dr}=6V

Current sensing
$R_{sns}=R_{ds}$

IC
Iμ=116μA

Rectifier
V_f = 350mV@0.1A
V_f = 550mV@1.5A

Inductor (J_{13}-J_{15} sh)
$L=L_2$=18μH
ESR_L=80mΩ
K_1=0.261, K_2=0.92,
x=1.21, y=2.01

Input capacitor (J_{12} op)
$C_{in}=C_7$=4.7μF
ESR=5mΩ

Output capacitor (J_{16} op, J_{17} sh)
$C_{out}=C_{16}$=220μF
ESR=25mΩ

Answer:

1. Does the increase of swiching frequency determine an increase of losses? ☐ yes ☐ no ☐ it depends on line voltage
   ☐ other: _____
2. Is the effect of the decrease of current ripple at higher switching frequency influential on the total losses? ☐ yes ☐ no ☐ it depends on line voltage
   ☐ other: _____

Discussion

In Test #1 we are interested in investigating correlations between the efficiency of the buck regulator and the values of the load current and of the input voltage.

The buck converter efficiency is expected to decrease while the load current increases. However, this happens above a cartain load current threshold, that is determined by the input voltage and by the parameters of the devices influencing the losses. In fact, the *Loss Formulae* provided in the *Theory Background* section show that the MOSFET gate charge loss, the inductor core loss and the IC loss do not depend on the load current, whereas all the other losses depend linearly or quadratically on the load current, and they can be bigger or lower depending on the device parameters. As a consequence, when the load current falls below a certain threshold, the losses that are independent on the load current determine a decrease of the efficiency. Above that load current threshold, instead, we observe a decrease of the efficiency while the load current increases, because of the increase of losses that depend on the load current.

The input voltage heavily influences the way the efficiency changes with the load current, as increasing the input voltage involves a decrease of the duty-cycle and then a different distribution of the current between the MOSFET and the diode. Moreover, at high input voltage and low load current the buck converter operates in the "Discontinuous Conduction Mode". In this mode of operation, the turn ON switching losses of the MOSFET are negligible, as the device is fired while the drain-to-source current is zero. Also the other loss contributions change due to different current waveshapes, as shown in the *Experimental Plots* of Figures 5 and 7. The loss formulae for buck converter in Discontinuous Conduction Mode are provided in [1]. (*See also the TI-PMLK Buck-Boost Experiment Book for further insight into the analysis of losses and efficiency of switching regulators in Discontinuous mode of operation*)

In Test #2 we are interested in investigating correlations between the efficiency of the buck regulator and the switching frequency.

The switching frequency has a manifold influence on power components losses, as shown in the *Loss Formulae* provided in the *Theory Background* section. Indeed, switching losses of the power MOSFET increase at a higher frequency. The switching frequency also influences inductor losses, in particular the core losses. The inductor ripple current is also influenced by the switching frequency, which in turn influences the core losses of the inductor and the conduction losses of the MOSFET and of the diode. Generally, a lower ripple current reduces the losses dependent on it. Finally, the switching frequency influences the operation in Continuous Conduction Mode or Discontiunous Conduction Mode, as shown in the *Experimental Plots* of Figures 5 and 7. *(See Experiment 2 to analyze the correlations between inductor current ripple and output voltage ripple, and see Experiment 4 and Experiment 5 to investigate the effects of inductor saturation on the ripple current waveform and peak-to-peak magnitude, and on current limit operation).*

Experimental plots

The experimental plot samples collected in the Figures 5 to 8 show some examples of the output voltage, the inductor current and the switching node voltage waveforms of the TPS54160 buck regulator in different operating conditions.

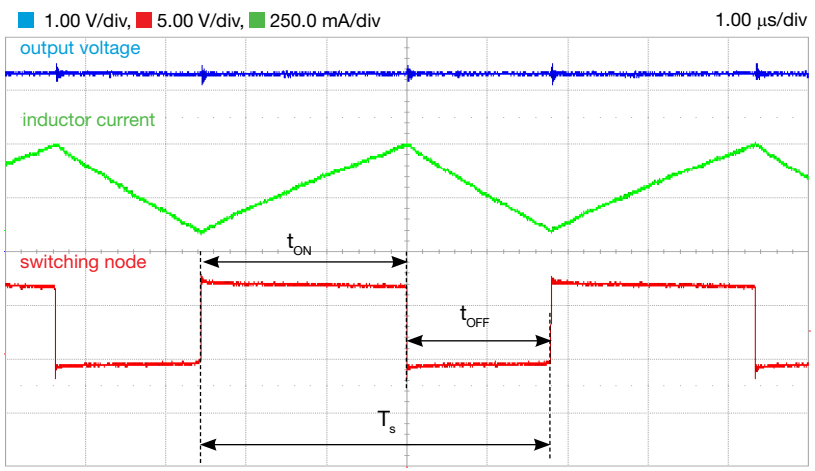

Figure 5. V_{in}=6V, I_{out}=0.2A, f_s=250kHz

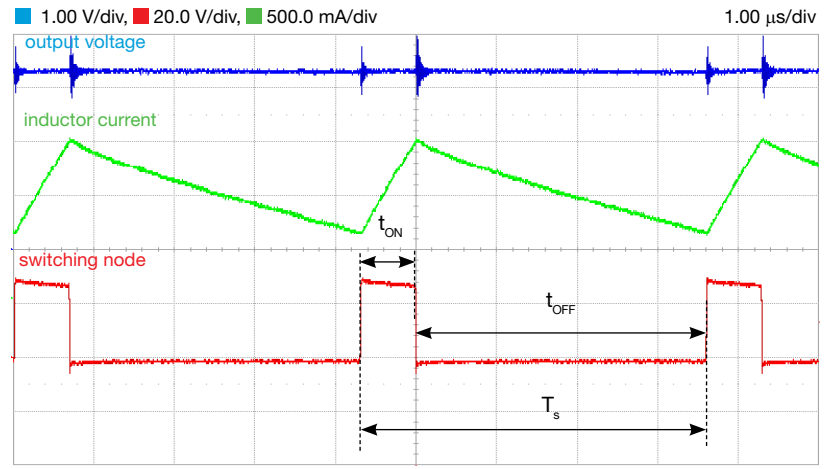

Figure 6. V_{in}=24V, I_{out}=1A, f_s=250kHz

The waveform plots in Figures 5 and 6 show that the output voltage V_{out} (blue trace) is well regulated at the 3.3V nominal value, whatever input voltage is set. A high-frequency ringing is observed on the output voltage in correspondence of the switching instants, where the switching node voltage [1] (red trace) rises (MOSFET turn ON) and falls (MOSFET turn OFF). These oscillations are caused by parasitic L-C parameters of the PCB layout and of the oscilloscope voltage probes, that form resonant loops excited by the sharp rise and fall of the switching node voltage.

The red trace corresponding to the square-wave of the switching node voltage clearly shows how the MOSFET ON time t_{ON} and OFF time t_{OFF} change while the input voltage increases (compare Figure 5 to Figure 6), thus determining a decrease of the duty-cycle D needed to guarantee the desired nominal output voltage.

The green trace corresponding to the inductor current shows the typical triangular wave-shape, whose peak-to-peak ripple magnitude is strongly dependent on the input voltage (maximum input voltage is the worst case for ripple current), as it can be observed by comparing the plots of Figures 5 and 6 (notice the different scales of the two figures).

[1] The switching node corresponds to PH node (Test Pin TP_g) in the TPS54160 schematic.

Experimental plots

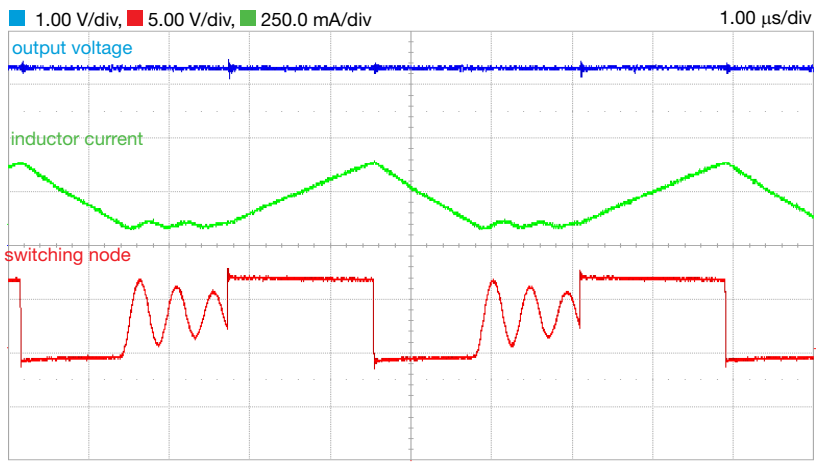

Figure 7. V_{in}=6V, I_{out}=0.1A, f_s=250kHz

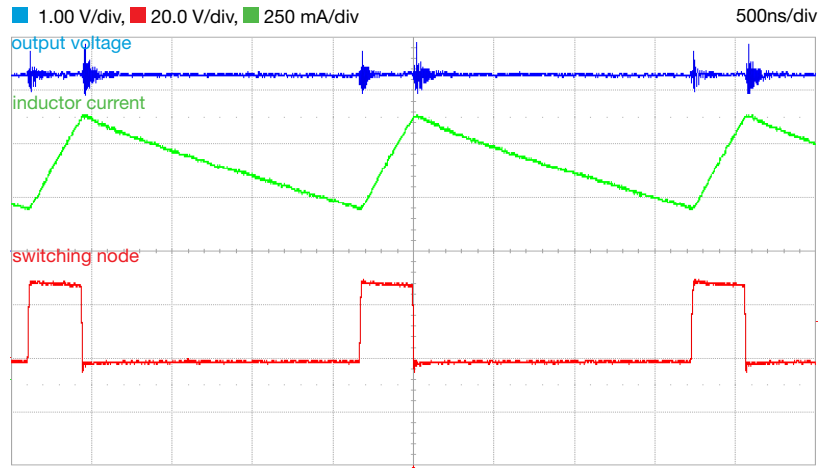

Figure 8. V_{in}=24V, I_{out}=1A, f_s=500kHz

The plots of Figure 7 show the waveforms of the output voltage (blue trace), the inductor current (green trace) and the switching node (red trace) when the buck converter operates in Discontinuous Conduction Mode, determined by the very low output current level. In each switching period, the diode stops conducting when the inductor current falls to zero, and a ringing interval is observed, which ends when the MOSFET turns ON at the beginning of the next switching period. The ringing is determined by the resonant loop formed by the inductor and by the parasitic capacitances of the MOSFET and of the diode.

The plots of Figure 8 can be compared with the plots of Figure 6 to detect the effects of the increase of the switching frequency from 250kHz to 500kHz. While the duty cycle is almost the same (only a small change can be observed due to the change of losses), the magnitude of peak-to-peak ripple current is merely halved.

Experiment 2

The goal of this experiment is to analyze the influence of switching frequency f_s and of capacitance C and resistance ESR of the input and output capacitors on the steady-state waveforms of the buck regulator. The TPS54160 buck regulator is used for this experiment.

Case Study

The goal of this experiment is to analyze the influence of the characteristics of output and input filter capacitors and of switching frequency on the output ripple voltage and input ripple current of the buck regulator.

The subject of investigation in this experiment are the output voltage and input current ripples of the buck regulator. Figure 1 shows a simplified schematic of the TPS54160 buck regulator with the main voltage and current waveforms highlighted.

The input current and the output voltage of a DC-DC buck converter should be ideally flat in steady-state operation (like in LDO regulators). However, in the buck regulator, like in other switching power supply topologies, they are comprised of a DC component, $\mathbf{I_{in}}$ and $\mathbf{V_{out}}$, and an AC ripple, $\Delta\mathbf{i_{in}}$ and $\Delta\mathbf{v_{out}}$, whose peak-to-peak magnitudes are labeled as $\Delta\mathbf{i_{inpp}}$ and $\Delta\mathbf{v_{outpp}}$ in Figure 1. In the *Theory Background* section it is highlighted that the current of the inductor **L** has a triangular wave-shape, whose peak-peak value $\Delta\mathbf{i_{pp}}$ depends on line voltage $\mathbf{V_{in}}$, output voltage $\mathbf{V_{out}}$, switching frequency $\mathbf{f_s}$ and on the inductance **L.** This current ripple is by-passed by the output capacitor $\mathbf{C_{out}}$ and influences the magnitude of the output voltage ripple $\Delta\mathbf{v_{outpp}}$. The MOSFET current has, instead, a trapezoidal wave-shape, whose peak-peak value depends on $\Delta\mathbf{i_{pp}}$ and on the load current $\mathbf{I_{out}}$. The MOSFET current influences the magnitude of the ripple voltage of the input capacitor $\mathbf{C_{in}}$ and of the input ripple current $\Delta\mathbf{i_{inpp}}$.

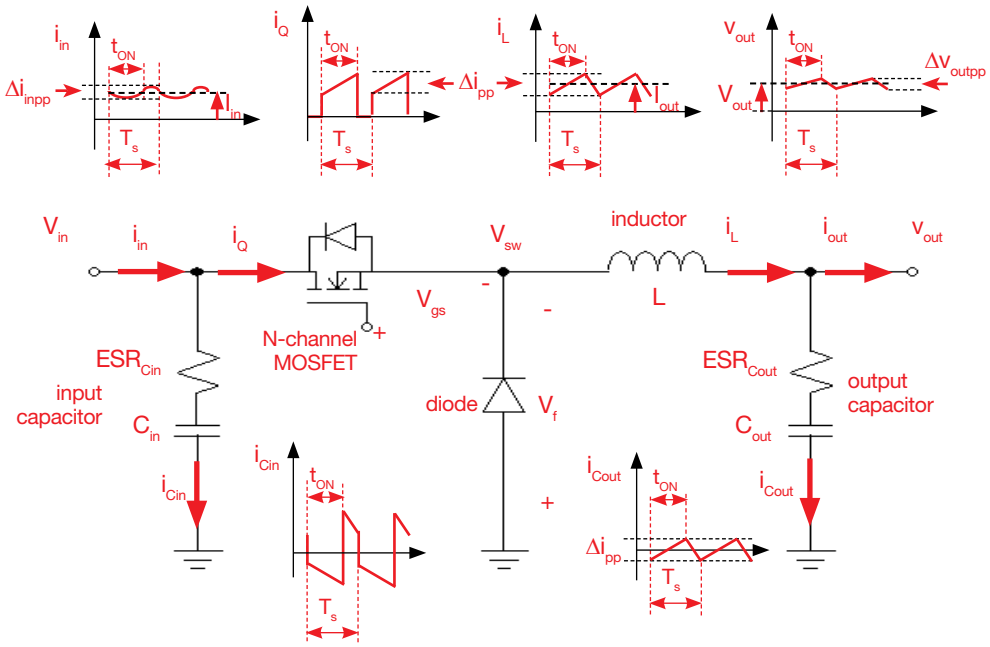

Figure 1. Buck converter simplified schematic

Test#1. We measure the output voltage and input current ripples of the TPS54160 buck regulator, for different input voltage, switching frequency and load current.

Test#2. We repeat the measurements of Test#1, with a fixed switching frequency, but with different combinations of input and output capacitors.

Theory Background

The input and output capacitors filter the high frequency switching noise inherent to the operation of switching regulators. In the buck regulator, the output capacitor has to by-pass the triangular-wave inductor current ripple, keeping the output voltage ripple limited within about 1%-2% of the average DC value, whereas the input capacitor has to bypass the trapezoidal wave MOSFET current ripple, keeping the input line current ripple limited within about 10%-20% of the average DC value. The waveform and magnitude of the ripple current to be filtered and the capacitance C and Equivalent Series Resistance (ESR) of the capacitors influence the shape and magnitude of resulting filtered output voltage and input current ripples. The simplified formulae for buck converter current and voltage ripple analysis in Continuous Conduction Mode operation are summarized hereafter.

Unsaturated inductor

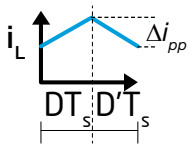

When the inductor is not in saturation, the peak-to-peak current ripple Δi_{pp} is determined by the switching frequency f_s, the inductance **L** and the input voltage V_{in} (*), according to formula (1):

(*) $D=V_{out}/V_{in}$, $D' = 1-D$

(1) $\Delta i_{pp}=V_{out}D'/(f_s L)$

Saturated inductor

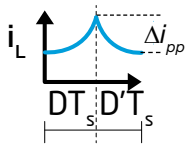

At high load current, the inductance **L** decreases because of magnetic core saturation and the peak-to-peak current ripple Δi_{pp} increases with respect to the unsaturated case, according to formula (2):

(2) $\Delta i_{pp}>V_{out}D'/(f_s L)$

High ESR output filter capacitor

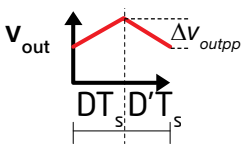

In electrolytic capacitors the **ESR** is dominant with respect to the impedance of the capacitance $1/(2\pi f_s C_{out})$ and the voltage ripple is determined by the **ESR** and by the current ripple Δi_{pp}, according to formula (3):

(3) $\Delta V_{outpp}=ESR\ \Delta i_{pp}$

Low ESR output filter capacitor

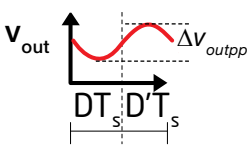

In ceramic capacitors the **ESR** is very small and the output voltage ripple is determined by the switching frequency f_s, the capacitance C_{out} and current ripple Δi_{pp}, according to formula (4):

(4) $\Delta V_{outpp}=\Delta i_{pp}/(8 f_s C_{out})$

High capacitance input filter capacitor

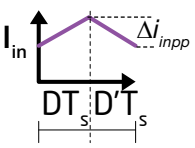

When the input capacitor is well designed the input current ripple is determined by the switching frequency f_s, the capacitance C_{in} of the input capacitor, the load current I_{out} and the input voltage V_{in} (*), according to formula (5):

(5) $\Delta i_{inpp}= I_{out}D'D/(f_s C_{in})$

Low capacitance input filter capacitor

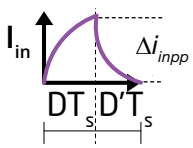

When the capacitance of the input capacitor is too small, the peak-to-peak magnitude of the line current ripple depends on load current and on inductor current ripple Δi_{pp}, according to formula (6):

(6) $\Delta i_{inpp}\approx I_{out}+ \Delta i_{pp}/2$

Good to Know

The voltage and current ripple wave-shapes can change due to:

- the occurrence of Discontinuous Conduction Mode operation (low I_{out}) [1][3];
- the balance between resistance ESR and capacitance C of capacitors [4];
- the dependence of the resistance ESR and of the capacitance C on frequency, operating temperature, operating voltage, tolerance and aging (*visit the capacitors manufacturers websites and see the relevant datasheets for more details*);
- the high frequency oscillations due to parasitic inductances of input supply, PCB traces and capacitors [3][5];
- special features of the controller (*the TPS54160 controller implements some special mode of operation at low load to improve the efficiency; see [5] for more details on TPS54160 operation and features*)

Experiment set-up: configuration

The instruments needed for this experiment are: a DC POWER SUPPLY, an OSCILLOSCOPE and a DC ELECTRONIC LOAD. Figure 2 shows the instruments connections. Follow the instructions provided in next page to set-up the connections.

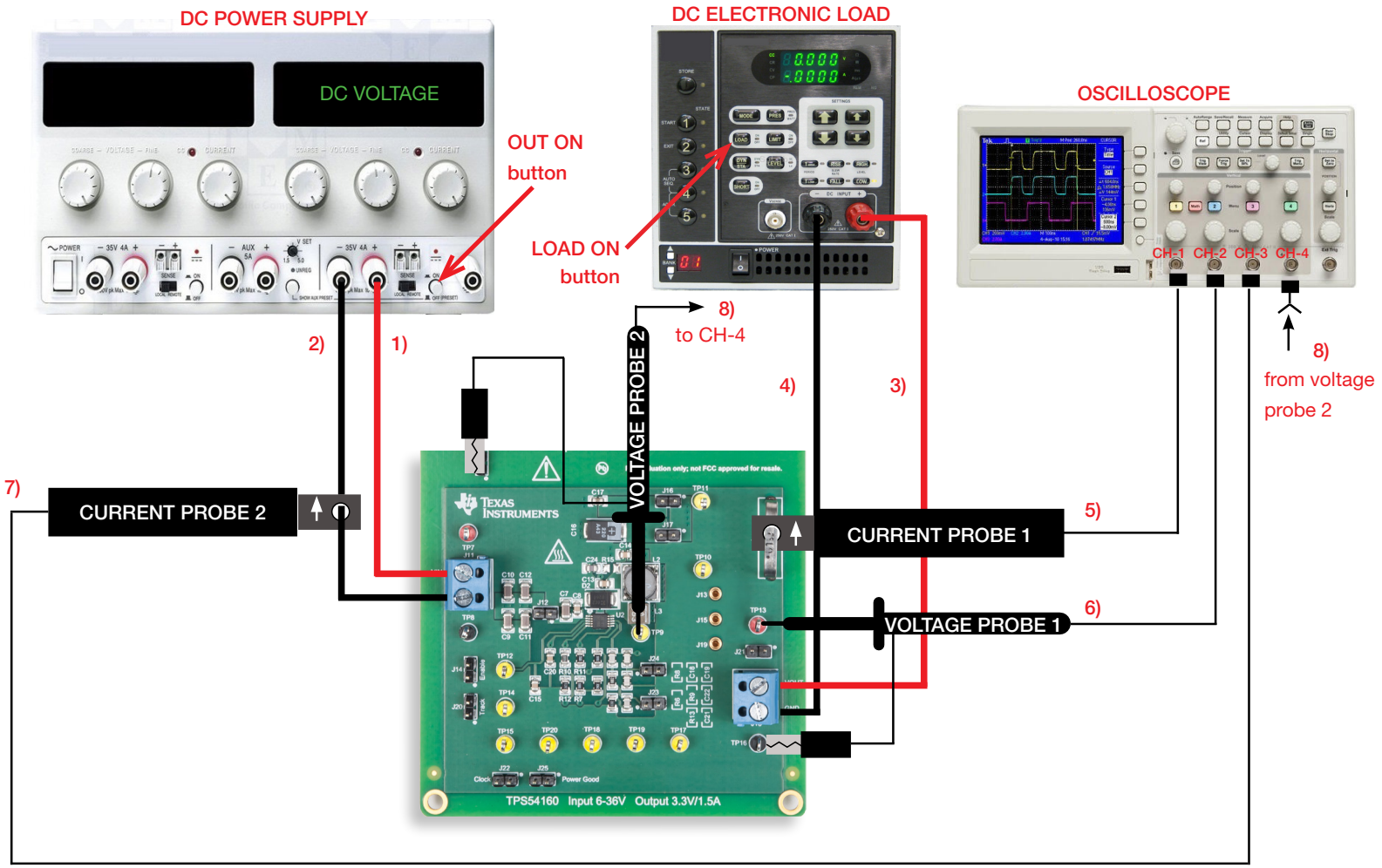

Figure 2. Experiment set-up.

Experiment set-up: instructions

With all the instruments turned off, make the following connections:

1) connect the POSITIVE (RED) OUTPUT of the DC POWER SUPPLY to the INPUT (VIN) of the J_{11} screw terminal of the TPS54160 buck regulator

2) connect the NEGATIVE (BLACK) OUTPUT of the DC POWER SUPPLY to the GROUND (GND) of the J_{11} screw terminal of the TPS54160 buck regulator

3) connect the OUTPUT (VOUT) of the J_{18} screw terminal of TPS54160 buck regulator to the POSITIVE (RED) INPUT of the ELECTRONIC LOAD

4) connect the NEGATIVE (BLACK) INPUT of the ELECTRONIC LOAD to the GROUND (GND) of the J_{18} screw terminal of TPS54160 buck regulator

5) connect a current probe to channel 1 of the OSCILLOSCOPE and hang it on the sensing resistor R_5 of the TPS54160 buck regulator
[NOTE: ensure that the arrow printed on the probe clamps corresponds to the current that exits the inductor towards the output capacitor]

6) connect a voltage probe to channel 2 of the OSCILLOSCOPE, hang its positive tip to TEST PIN TP_{13} and its ground alligator connector to TEST PIN TP_{16} to measure the output voltage of the TPS54160 buck regulator
[WARNING: **DO NOT INVERT** the positive and ground connections of the voltage probe]

7) connect a current probe to channel 3 of the OSCILLOSCOPE and hang it on the cable connecting the NEGATIVE (BLACK) OUTPUT of the DC POWER SUPPLY to the GROUND (GND) of the J_{11} screw terminal of the TPS54160 buck regulator
[NOTE: ensure that the arrow printed on the probe clamps corresponds to the current that enters the DC POWER SUPPLY]

8) connect a voltage probe to channel 4 of the OSCILLOSCOPE and hang it on the TEST PIN TP_9 which is the switching node voltage of the TPS54160 buck regulator

Test#1: preparation and procedure

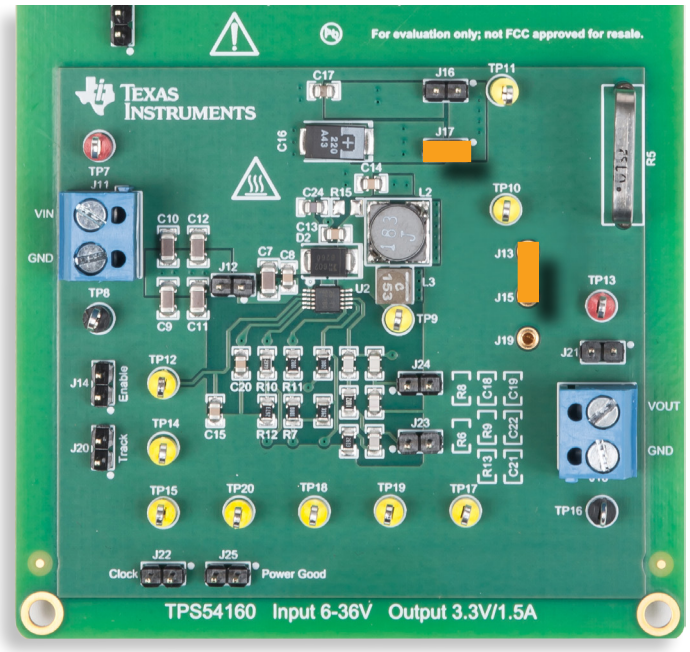

Figure 3. TPS54160 buck board: jumpers set-up for Test#1

Initial jumpers set-up (see Figure 3):

- J_{13}-J_{15} **shorted** → L_2 (18μH, ferrite) inductor connected
- J_{17} **shorted** → C_{16} (220μF) output capacitor connected
- J_{14} **open** → internal signal enabled
- J_{20} **open** → internal soft-start signal enabled
- J_{21} **open** → output capacitor connected to the voltage sensor R_6-R_8
- J_{12} **open** → C_9-C_{12}(4x4.7μF) input capacitors disconnected
- J_{16} **open** → C_{17} (10μF) output capacitor disconnected
- J_{22} **open** → switching frequency f_s = 250kHz
- J_{25} **open** → power good signal enabled
- J_{23} **AND** J_{24} **open** → compensation set-up for C_{16} (220μF) output capacitor

Test Procedure:

1) turn on the OSCILLOSCOPE, set CH-1 and CH-3 in DC 50Ω coupling mode, set CH-2 and CH-4 in DC 1MΩ coupling mode, select CH-4 as trigger source, and execute the "de-gauss" of the current probes (this removes possible dc bias in the current probes)
2) turn on the DC POWER SUPPLY (be sure that the OUT ON button is OFF), set the voltage at 6V value, and set the CURRENT LIMIT at 1A
3) turn on the ELECTRONIC LOAD (be sure that the "LOAD ON" button is OFF), set the ELECTRONIC LOAD in CONSTANT CURRENT MODE, and set the current at 0.15A.
4) turn ON the DC POWER SUPPLY "OUT ON" button. Under these conditions you should see the output voltage on CH-2 trace of the OSCILLOSCOPE as a flat horizontal line at 3.3V level, and the switching node voltage on CH-4 trace as a square-wave swinging between the input voltage and a slightly negative voltage. (If the waveforms do not look as described above, turn OFF the "OUT ON" button of the DC POWER SUPPLY and verify the previous steps)
5) turn ON the "LOAD ON" button of the ELECTRONIC LOAD and set CH-2 in AC 1MΩ coupling mode. Under these conditions you should see on the OSCILLOSCOPE a triangular waveshape with 0.15A average value on CH-1 (inductor current), a quasi-triangular waveshape on CH-3 (input current), the trace of CH-2 (output voltage) swinging around 0V level (set the vertical scale of CH-2 at 10mV/div or 20mV/div to get a good visualization. If you read values much different than the one listed above, turn OFF the "LOAD ON" button of the ELECTRONIC LOAD and the "OUT ON" button of the DC POWER SUPPLY and verify the previous steps)
6) read the output voltage peak-to-peak ripple magnitude and the input current peak-to-peak ripple magnitude, record the values in Table 1; repeat this step for all the values of the load current and input voltage listed in Table 1. (You do not need to turn OFF the DC POWER SUPPLY "OUT ON" button and the ELECTRONIC LOAD "LOAD ON" button while changing the input voltage and the load current)
7) turn OFF the "LOAD ON" button of the ELECTRONIC LOAD and the "OUT ON" button of the DC POWER SUPPLY, then short jumper J_{19} to set the switching frequency f_s = 500kHz and repeat the steps 4) to 6)
8) at the end of the measurements, turn OFF the "LOAD ON" button of the ELECTRONIC LOAD and the "OUT ON" button of the DC POWER SUPPLY, then switch off all the instruments

Test#1: measure and calculate

1) Measure the peak-to-peak output voltage ripple Δv_{outpp} and the peak-to-peak input current ripple Δi_{inpp} and collect the results in Table 1.
2) Analyze the results, answer the questions and explain your observations by using the ripple formulae and the information provided in the *Theory Background* section.

Table 1. Measured output voltage ripple and input current ripple of the TPS54160 buck regulator vs load current, input voltage and switching frequency.

(1) Δv_{outpp} / (2) Δi_{inpp}	J_{22} op (f_s = 250kHz)						J_{22} sh (f_s = 500kHz)					
	I_{out}=0.15A		I_{out}=0.5A		I_{out}=1.5A		I_{out}=0.15A		I_{out}=0.5A		I_{out}=1.5A	
V_{in}=6V	(1)	(2)	(1)	(2)	(1)	(2)	(1)	(2)	(1)	(2)	(1)	(2)
V_{in}=18V	(1)	(2)	(1)	(2)	(1)	(2)	(1)	(2)	(1)	(2)	(1)	(2)
V_{in}=36V	(1)	(2)	(1)	(2)	(1)	(2)	(1)	(2)	(1)	(2)	(1)	(2)

MOSFET (TPS54160)
R_{ds}=180mΩ,
Q_g=3nC, α_{sw}=0.25ns/V,
$t_{sw}=\alpha_{sw}V_{IN}$
V_{dr}=6V

Current sensing
$R_{sns}=R_{ds}$

IC
Iμ=116μA

Rectifier
V_f = 350mV@0.1A
V_f = 550mV@1.5A

Inductor (J_{13}-J_{15} sh)
$L=L_2$=18μH
ESR_L=80mΩ
K_1=0.261, K_2=0.92,
x=1.21, y=2.01

Input capacitor (J_{12} op)
$C_{in}=C_7$=4.7μF
ESR=5mΩ

Output capacitor (J_{16} op, J_{17} sh)
$C_{out}=C_{16}$=220μF
ESR=25mΩ

Answer:

1. Does the output voltage ripple increase with the load current ? ☐ yes ☐ no ☐ it depends on line voltage
2. Does the input current ripple increase with the line voltage ? ☐ yes ☐ no ☐ it depends on load current
3. Do the ripples decrease with higher switching frequency? ☐ yes ☐ no ☐ it depends on line voltage and load current
4. How does the output voltage ripple wave-shape look like ? ☐ triangular ☐ quasi-sinusoidal ☐ other: _____

Test#2: preparation and procedure

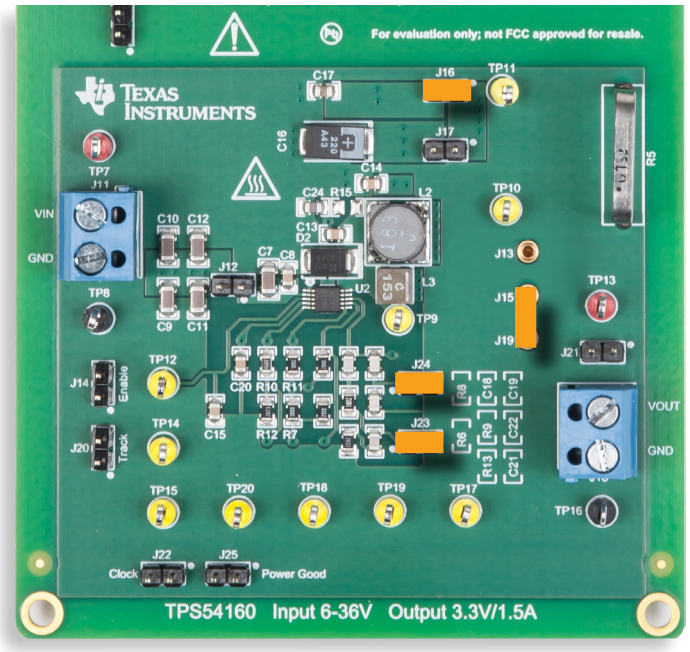

Figure 3. TPS54160 buck board: jumpers set-up for Test#1

Jumpers set-up (see Figure 4):

- J_{15}-J_{19} **shorted** → L_3 (15μH, powder) inductor connected
- J_{17} **open** → C_{16} (220μF) output capacitor disconnected
- J_{14} **open** → internal signal enabled
- J_{20} **open** → internal soft-start signal enabled
- J_{21} **open** → output capacitor connected to the voltage sensor R_6-R_8
- J_{12} **open** → C_9-C_{12}(4x4.7μF) input capacitors disconnected
- J_{22} **open** → switching frequency f_s = 250kHz
- J_{25} **open** → power good signal enabled
- J_{16} **shorted** → C_{17} (10μF) output capacitor connected
- J_{23} **AND** J_{24} **shorted** → compensation set-up for C_{17} (10μF) output capacitor

[**NOTE:** the set-up described above corresponds to case(a) of Table 2]

Test Procedure:

1) turn on the OSCILLOSCOPE, set CH-1 and CH-3 in DC 50Ω coupling mode, set CH-2 and CH-4 in DC 1MΩ coupling mode, select CH-4 as trigger source, and execute the "de-gauss" of the current probes (this removes possible dc bias in the current probes)
2) turn on the DC POWER SUPPLY (ensure that the "OUT ON" button is OFF), set the VOLTAGE at the initial value of 6V, and set the CURRENT LIMIT at 1A
3) turn on the ELECTRONIC LOAD (be sure that the "LOAD ON" button is OFF), set the ELECTRONIC LOAD in CONSTANT CURRENT MODE, set the current at 0.15A.
4) turn ON the DC POWER SUPPLY "OUT ON" button. Under these conditions you should see the output voltage on CH-2 trace of the OSCILLOSCOPE as a flat horizontal line at 3.3V level, and the switching node voltage on CH-4 trace as a square-wave swinging between the input voltage and a slightly negative voltage. (If the waveforms do not look as described above, turn OFF the "OUT ON" button of the DC POWER SUPPLY and verify the previous steps)
5) turn ON the "LOAD ON" button of the ELECTRONIC LOAD and set CH-2 in AC 1MΩ coupling mode. Under these conditions you should see on the OSCILLOSCOPE a triangular waveshape with 0.15A average value on CH-1 (inductor current), a quasi-triangular waveshape on CH-3 (input current), the trace of CH-2 (output voltage) swinging around 0V level (set the vertical scale of CH-2 at 10mV/div or 20mV/div to get a good visualization. If you read values much different than the one listed above, turn OFF the "LOAD ON" button of the ELECTRONIC LOAD and the "OUT ON" button of the DC POWER SUPPLY and verify the previous steps)
6) read the output voltage peak-to-peak ripple magnitude and the input current peak-to-peak ripple magnitude, record the values in Table 2. Repeat this step for all the values of the load current and input voltage listed in Table 2. (You do not need to turn OFF the DC POWER SUPPLY "OUT ON" button and the ELECTRONIC LOAD "LOAD ON" button while changing the input voltage and the load current)
7) turn OFF the "LOAD ON" button of the ELECTRONIC LOAD and the "OUT ON" button of the DC POWER SUPPLY, then set the jumpers as indicated in Table 2 for case (b) and repeat the steps 4) to 6)
8) at the end of the measurements, turn OFF the "LOAD ON" button of the ELECTRONIC LOAD and the "OUT ON" button of the DC POWER SUPPLY, then switch off all the instruments

Test#2: measure and calculate

1) Measure the output voltage ripple ΔV_{outpp} and input current ripple Δi_{inpp} and record the values in Table 2.
2) Calculate the theoretical values of output voltage ripple ΔV_{outpp} and input current ripple Δi_{inpp} by means of the formulae given in the *Theory Background* section and record the values in Table 2. [**NOTE:** use the values of the duty-cycle D and switching frequency f_s measured by means of the switching node voltage trace of the oscilloscope CH-4, as in *Experiment 1*]
3) Analyze and compare the results collected in Table 2, answer the questions and explain your observations by using the ripple formulae and the information provided in the *Theory Background* section.

Table 2. Measured and calculated output voltage ripple and input current ripple of the TPS54160 buck regulator vs load current, input voltage and capacitance of input and output capacitors

(1) $\Delta V_{outpp\ exp}$	(2) $\Delta i_{inpp\ exp}$	case (a) $C_{out}=C_{17}=10\mu F$, $C_{in}=C_7=4.7\mu F$						case (b) $C_{out}=C_{16}=220\mu F$, C_{in}= parallel of $C_7...C_{12}$ = 23.5µF					
(3) $\Delta V_{outpp\ theo}$	(4) $\Delta i_{inpp\ theo}$	I_{out}=0.15A		I_{out}=0.5A		I_{out}=1.5A		I_{out}=0.15A		I_{out}=0.5A		I_{out}=1.5A	
V_{in}=6V		(1)	(2)	(1)	(2)	(1)	(2)	(1)	(2)	(1)	(2)	(1)	(2)
		(3)	(4)	(3)	(4)	(3)	(4)	(3)	(4)	(3)	(4)	(3)	(4)
V_{in}=18V		(1)	(2)	(1)	(2)	(1)	(2)	(1)	(2)	(1)	(2)	(1)	(2)
		(3)	(4)	(3)	(4)	(3)	(4)	(3)	(4)	(3)	(4)	(3)	(4)
V_{in}=36V		(1)	(2)	(1)	(2)	(1)	(2)	(1)	(2)	(1)	(2)	(1)	(2)
		(3)	(4)	(3)	(4)	(3)	(4)	(3)	(4)	(3)	(4)	(3)	(4)

Inductor:
J_{15}-J_{19} **sh:**
L = L_3=15µH, ESR=100mΩ

Input capacitor:
J_{12} **op:** $C_{in}=C_7$=4.7µF, ESR=10mΩ
J_{12} **sh:** C_{in}=parallel of $C_7,...,C_{12}$

Output capacitor:
J_{16} **sh,** J_{17} **op:** $C_{out}=C_{17}$=10µF, ESR=5mΩ
J_{16} **op,** J_{17} **sh:** $C_{out}=C_{16}$=220µF, ESR=25mΩ

Switching frequency:
J_{22} **sh:** f_s = 500kHz
J_{22} **op:** f_s = 250kHz

Answer:

1. Identify the input voltage condition causing the maximum pk-pk ripples:

a) Δi_{ppmax}: V_{in} = _____ b) $\Delta v_{outppmax}$: V_{in} = _____ c) $\Delta i_{inppmax}$: V_{in} = _____

2. Identify the output capacitor ensuring the lowest output voltage peak-peak ripple for the switching frequency and input voltage conditions given in Table 2, and explain your results:

_____

_____

Discussion

In Test #1 we are interested in investigating correlations between the operating conditions and the input current ripple and output voltage ripple.

The ripple formulae (1)-(6) provided in the *Theory Background* section highlight the influence of input voltage V_{in}, load current I_{out} and switching frequency f_s on the inductor current ripple, output voltage ripple and input current ripple.

In particular, it can be seen that the input voltage and the switching frequency f_s have a major influence on the inductor current ripple. Referring to non-saturated inductor formula (1), the ripple increases when the input voltage increases and when the switching frequency decreases. The load current has instead a very little influence on the inductor current ripple. In theory, the inductor current ripple should be insensitive to the load current, as shown in the formula (1). However, when the load current increases, there can be an increase of the duty-cycle to compensate the increase of losses: as a consequence, a weak change of the inductor ripple current can be observed according to the ripple formula.

Finally, referring to formula (5), that is valid for well designed input filter capacitor and negligible input line inductance, we see that the input current ripple is proportional to the load current, is inversely proportional to the switching frequency, and has a maximum when the duty-cycle D is 0.5, that is when the input voltage is twice bigger than the output voltage. The experimental waveforms of input current shown in Figures 5, 6 and 8 are influenced by the input line inductance. When the input line inductance is not negligible, the formula (5) is not valid, and a more accurate circuit analysis is required to get an appropriate ripple formula.

In Test #2 we are interested in investigating correlations between the characteristics of capacitors and the input current ripple and output voltage ripple.

The ripple formulae provided in the *Theory Background* section show that an increase of the capacitance has in general a beneficial effect in the reduction of output voltage ripple and input current ripple. Also observe that changing the type of output capacitor (electrolytic to ceramic) has an effect on the output voltage ripple waveshape, as shown in the experimental sample plots of Figures 5 and 6. In electrolytic capacitors the voltage ripple is almost trapezoidal, instead of purely triangular as shown in the simplified waveshape relevant to the formula (3) in the *Theory Background* section.

The sensitiveness of output voltage ripple with respect to the operating parameters vary much between electrolytic capacitors (high ESR) and ceramic capacitors (low ESR). The ripple formula (3) of the *Theory Background* section show that the voltage ripple of electrolytic capacitors is merely proportional to the inductor ripple: thus what we said for the inductor current ripple is valid for the output voltage ripple too. The ripple formula (4) shows that ceramic capacitors exhibit a much stronger sensitiveness with respect to the switching frequency: if we double the switching frequency the ripple becomes one fourth, whereas for an electrolytic capacitor it becomes one half (see Figures 7 and 8). The sensitiveness of output voltage ripple with respect to the load current is the same of the inductor current ripple.

The sharp edges observed in correspondence of the MOSFET turn ON and turn OFF instants are determined by the stray inductance of electrolytic capacitors. Ceramic capacitors, instead, have a very low ESR and stray inductance. Therefore, their voltage ripple waveform looks like the simplified waveshape relevant to the formula (4).

The influence of the output capacitor on buck converter performance is not limited to the steady-state conditions. *Experiment 3* investigates the impact of the output capacitor on the dynamic response of the buck regulator.

Experimental plots

The experimental plot samples collected in the Figures 5 to 8 show some samples of the output voltage, the input current and the switching node voltage waveforms of the TPS54160 buck regulator in different operating conditions.

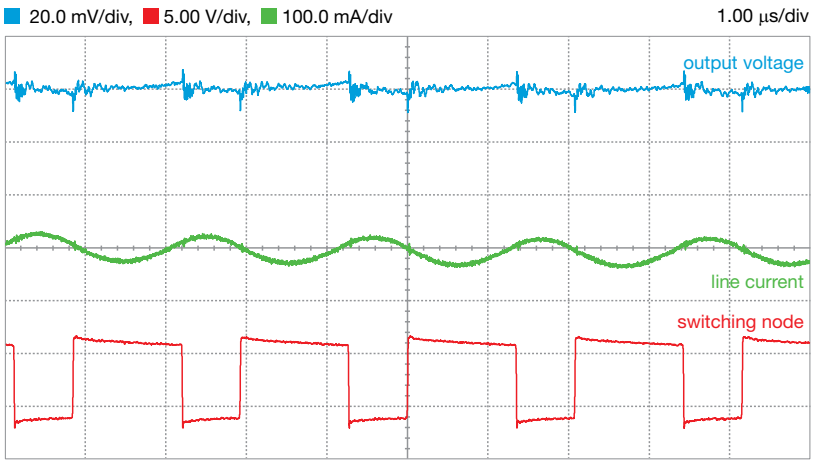

Figure 5. V_{in}=6V, I_{out}=1.5A, f_s=500kHz, C_{out}=220µF (electrolytic capacitor)

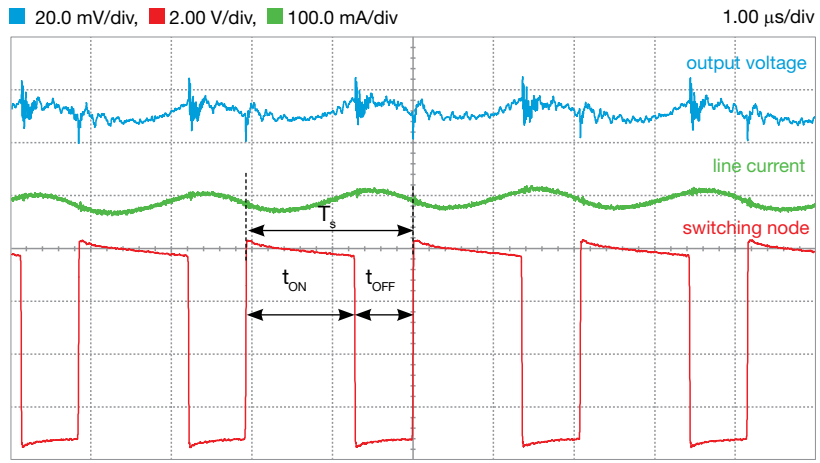

Figure 6. V_{in}=6V, I_{out}=1.5A, f_s=500kHz, C_{out}=10µF (ceramic capacitor)

The waveform plots in Figures 5 and 6 show the output voltage ripple (blue trace) with an electrolytic and a ceramic output capacitor respectively. A ringing is observed on the output voltage in correspondence of the MOSFET commutations, where the switching node voltage[1] (red trace) rises (the MOSFET turns ON) and falls (the MOSFET turns OFF). These oscillations are caused by parasitic L-C parameters of the PCB layout and of the oscilloscope voltage probes, that form resonant loops excited by the sharp rise and fall of the switching node voltage. The expanded red trace corresponding to the square-wave of the switching node voltage in Figure 6 shows that it is not flat during the MOSFET ON time and OFF time. The slope of the switching node voltage during the ON time is determined by the instantaneous voltage drop across the MOSFET channel resistance, whose magnitude increases while the rising inductor current passes through it. The slope of the switching node voltage during the OFF time is determined by the instantaneous forward voltage drop of the diode, whose magnitude decreases while the falling inductor current passes through it.
The green trace corresponding to the input current shows the typical wave-shape obtained when the input capacitor is sufficiently big. The peak-to-peak magnitude of this current ripple is also influenced by the stray inductance of cables connecting the DC power supply to the input connector of the board under test and by the output impedance of the DC power supply itself.

[1] The switching node corresponds to PH node (Test Pin TP_9) in the TPS54160 schematic.

Experimental plots

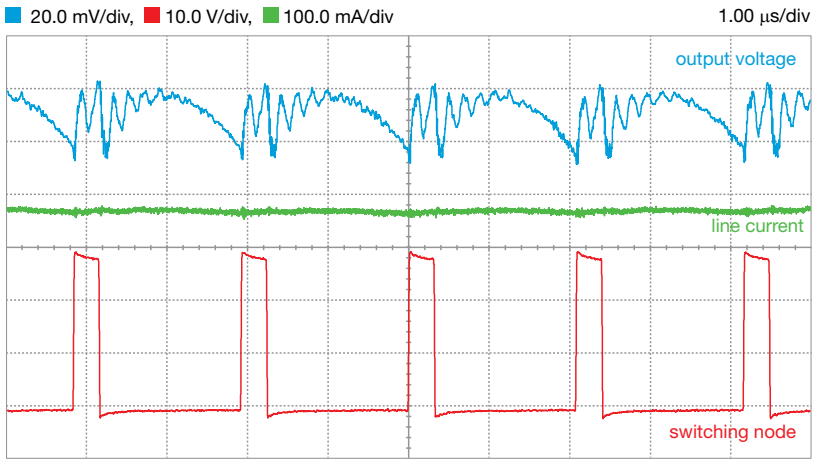

Figure 7. V_{in}=24V, I_{out}=0.4A, f_s=500kHz, C_{out}=10µF (ceramic capacitor)

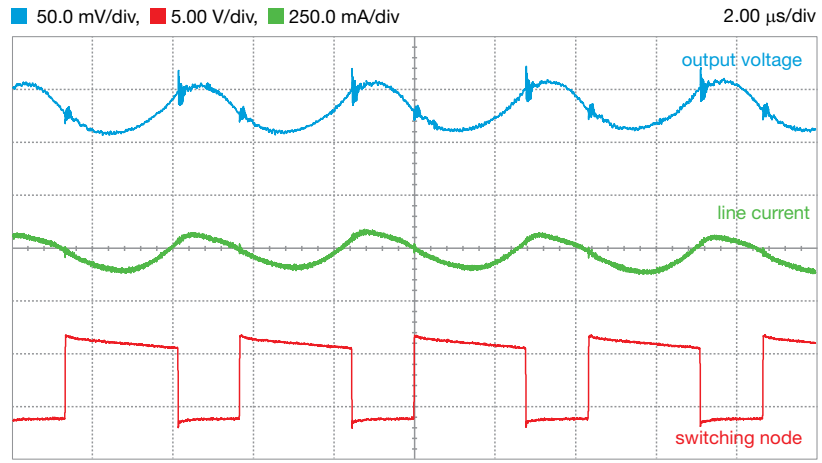

Figure 8. V_{in}=6V, I_{out}=1.5A, f_s=250kHz , C_{out}=10µF (ceramic capacitor)

The plots of Figures 7 and 8 show the joined effect of the input voltage and switching frequency on the output voltage ripple with ceramic capacitor. Increasing the switching frequency from 250kHz to 500kHz (2x) has a strong effect in the ripple reduction, despite of the input voltage increases from 6V to 24V (4x) (*see ripple formulae in the Theory Background section*).

Experiment 3

The goal of this experiment is to analyze the influence of voltage loop feedback compensation on load-transient response of current-mode control buck regulator. The TPS54160 buck regulator is used for this experiment.

Case Study

The goal of this experiment is to analyze the influence of the feedback compensation on the load transient response of a current mode controlled buck regulator.

Figure 1(a) shows the schematic of the TPS54160 buck regulator, including the basic elements of Peak-Current-Control (PCC) circuitry. The PCC forces the power inductor to operate like a voltage-controlled current source in the low frequency range, so that $i_L = gm_{ps} V_c$, where $gm_{ps}=1/A_{sns}$ is the trans-conductance of the power stage. A_{sns} is the current sensing gain of the TPS54160. V_c is the control voltage (which is the TPS54160 COMP PIN voltage) generated by the TPS54160 trans-conductance OP-AMPs output current $I_{OTA} = gm_{OTA} V_{err}$, based on the error $V_{err} = V_{sense} - V_{ref}$ between the output voltage sensing signal V_{sense} and the reference voltage $V_{ref.}$ The gain of the voltage loop highlighted in Figure 1(a), which determines the load transient response of the regulator, is influenced by the external feedback impedance. For the analysis of the TPS54160 PCC buck regulator load transient response the simplified schematic of Figure 1(b) can be adopted.

Test#1. We feed the TPS54160 regulator with a constant DC voltage source and record the output voltage waveform while the load current fast swings between two fixed levels. We measure the magnitude of the output voltage transient surges. We observe and discuss the influence of the dynamic compensation on the magnitude of voltage transient surges.

Test#2. We repeat the Test#1 with different combinations of output capacitor and feedback compensation. We observe that certain combinations provide very good load transient response, whereas other ones are poorly performing, causing the action of overvoltage protection or leading to instability of the regulator.

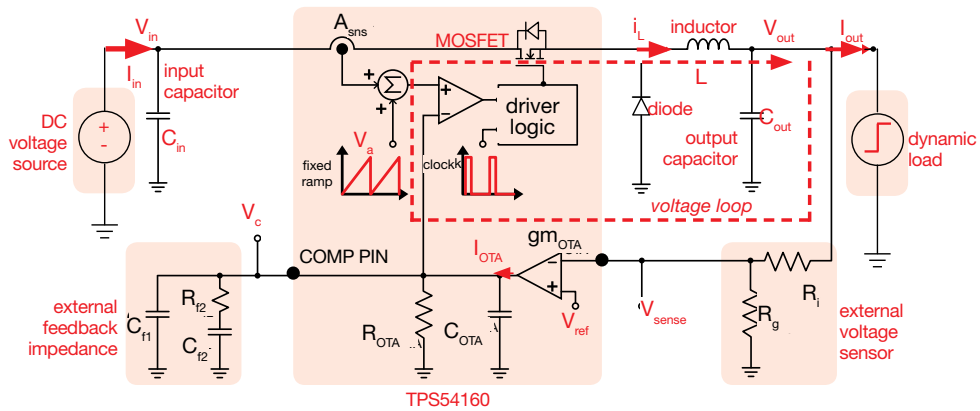

(a) schematic with TPS54160 internal PCC circuitry

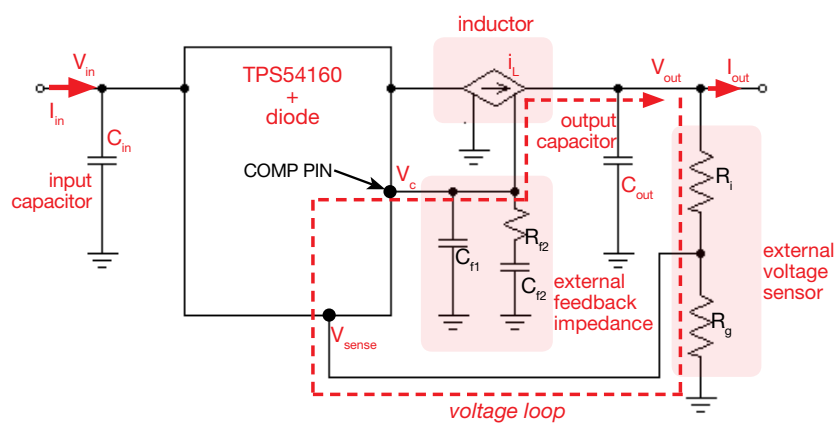

(b) simplified schematic for voltage loop dynamic analysis

Figure 1. TPS54160 buck regulator

Theory Background

The simplified formulae for voltage loop analysis and compensation of buck regulator in Continuous Conduction Mode operation are provided in this Section (*see [1][2][3][7] for more details about dynamic modeling and control design of switching regulators and see [5] for more details on TPS54160 operation and control features*)

Load Transient Response vs Voltage Loop Gain

A sudden load current transient causes a perturbation on the output voltage. Figures 2(a) and 2(b) show respectively an example of a good and of a bad response of the PCC buck regulator to load transients shown in Figure 2(c).

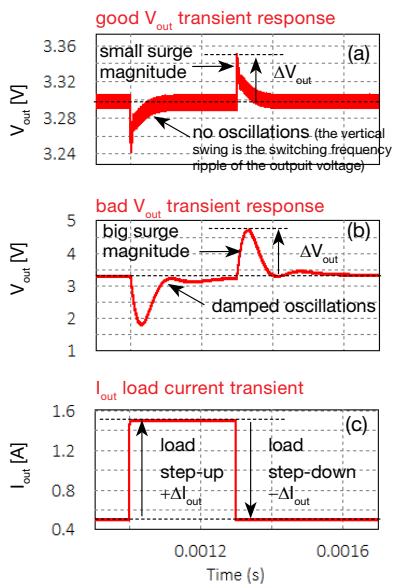

Figure 2

A good response is characterized by:

- a small magnitude of output voltage surges (typically less than 5% of the average DC output voltage);
- the absence of oscillations;
- a fast asymptotic return of the ouput voltage (few switching periods) to its nominal value.

The load transient behavior of the PCC buck regulator is determined by the characteristics of the voltage loop gain. A transient response like the one of Figure 2(a) is achieved if the Bode plot of the voltage loop gain is as in Figure 3.

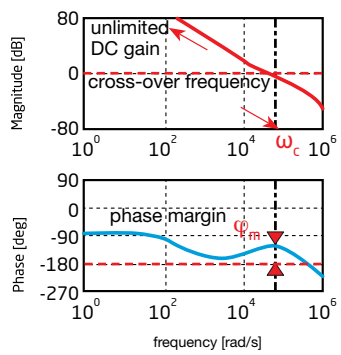

Figure 3

A good loop gain is characterized by:

- an unlimited DC magnitude, to ensure zero offset on V_{out} DC value (*);
- a high crossover frequency ω_c, to limit the magnitude of V_{out} transients;
- a phase margin φ_m greater than 50° at the crossover frequency ω_c, to reduce the oscillations during the transients;
- a phase greater than -180° where the magnitude is greater than 0dB, to ensure global asymptotic stability.

The voltage-loop gain of PCC buck regulator of Figure 1 is given by (1):

$$(1)\quad T(s) \cong \frac{T_o}{H_s}\frac{1+s/\omega_{zps}}{1+s/\omega_{pps}}\frac{\omega_{oea}}{s}\frac{1+s/\omega_{zea}}{1+s/\omega_{pea}}$$

The TPS54160, the diode, the inductor and the output capacitor, determine the following elements of the loop gain (1):

(2) $T_o = gm_{ps} V_{out} / I_{out}$

(3) $\omega_{zps} = 1 / (ESR_{Cout} C_{out})$

(4) $\omega_{pps} = I_{out} / (V_{out} C_{out})$

(5) $H_s = 1 + s / (Q_s \pi f_s) + s^2 / (\pi f_s)^2$ (**)

(6) $Q_s = 1 / [\pi(2D'-0.5)]$

f_s = switching frequency

ESR_{Cout} = ESR of output capacitor

$D' = 1-D = 1-V_{out}/V_{in}$

The voltage sensor $\{R_g, R_i\}$ and the feedback impedance $\{C_{f1}, C_{f2}, R_{f2}\}$ highlighted in Figure 1 determine the following elements of the loop gain (1):

(7) $\omega_{oea} = gm_{OTA} H / C_{f2}$ (***)

(8) $\omega_{zea} = 1 / (R_{f2} C_{f2})$ (***)

(9) $\omega_{pea} = 1 / (R'_{f2} C'_{f1})$ (***)

(10) $H = R_g / (R_g + R_i) = V_{ref} / V_{out}$

(11) $R'_{f2} = R_{f2} R_{OTA} / (R_{f2} + R_{OTA})$

(12) $C'_{f1} = C_{f1} + C_{OTA}$

The formulae (2) to (12) highlight that the characteristics of the loop gain of the TPS54160 PCC buck regulator, and therefore its load transient response, depend on the input voltage, on the load current, on the output capacitor, and on the feedback impedance.

(*) The OTA output resistance R_{OTA} determines a finite DC loop gain magnitude:
$T_{DC} = (V_{out}/I_{out}) gm_{ps} R_{OTA} gm_{OTA} H$

(**) The factor H_s accounts for the phase lag and gain attenuation caused by the inherent sampling mechanism of PCC (*see [7] for more details on PCC modeling*)

(***) See [2] for details on the design of the external feedback impedance $\{C_{f1}, C_{f2}, R_{f2}\}$

Good to Know

1 Different damped oscillations can be observed in the transient response of the PCC buck regulator, depending on the type of perturbation imposed to the regulator and on what you select to observe the transient response, and on the characteristics of the voltage loop gain. In particular, you may observe different transient behavior if you subject the PCC buck regulator to load current step or to a input voltage step, and if you observe the output voltage or the input current. A voltage loop gain phase marging φ_m greater than 50° does not necessarily ensure the absence of damped oscillations in all the transient responses of the PCC buck regulator. 2 Given equation (1), the cross-over frequency can be determined by generating the Bode plots (e.g. by means of MATLAB program) and detecting where the magnitude equals 0dB, as in Figure 3.

Experiment set-up: configuration

The instruments needed for this experiment are: a DC POWER SUPPLY, an OSCILLOSCOPE and a **DC ELECTRONIC LOAD**. Figure 4 shows the instruments connections. **Follow the instructions provided in next page to set-up the connections.**

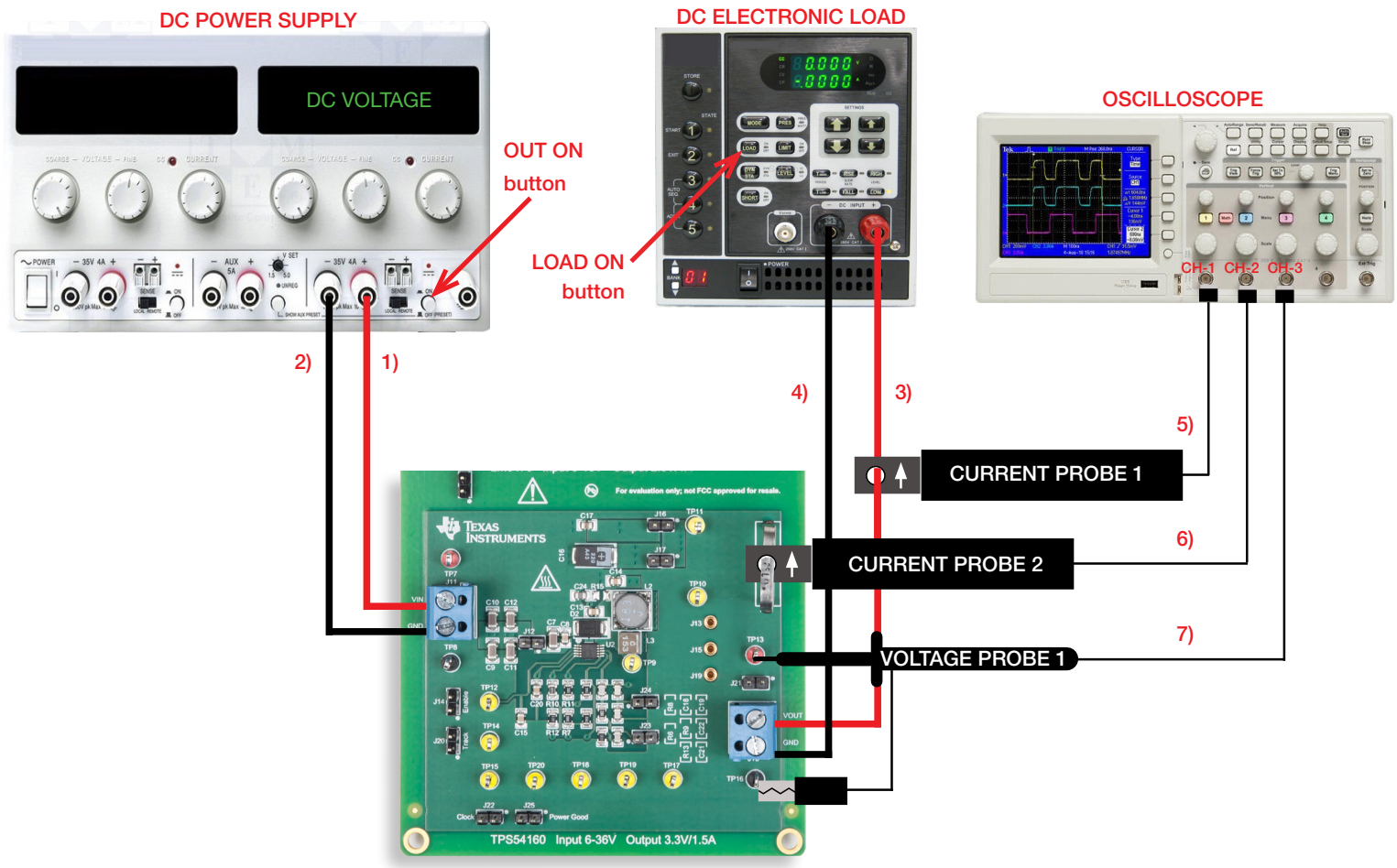

Figure 4. Experiment set-up.

Experiment set-up: instructions

With all the instruments turned off, make the following connections:

1) connect the POSITIVE (RED) OUTPUT of the DC POWER SUPPLY to the INPUT (VIN) of the J_{11} screw terminal of the TPS54160 buck regulator

2) connect the NEGATIVE (BLACK) OUTPUT of the DC POWER SUPPLY to the GROUND (GND) of the J_{11} screw terminal of the TPS54160 buck regulator

3) connect the OUTPUT (VOUT) of the J_{18} screw terminal of the TPS54160 buck regulator to the POSITIVE (RED) INPUT of the ELECTRONIC LOAD.

4) connect the GROUND (GND) of the J_{18} screw terminal of the TPS54160 buck regulator to the NEGATIVE (BLACK) INPUT of the ELECTRONIC LOAD

5) connect a current probe to channel 1 of the oscilloscope and hang it on the cable connecting the OUTPUT (VOUT) of the J_{18} screw terminal of the TPS54160 buck regulator to the POSITIVE (RED) INPUT of the ELECTRONIC LOAD
[NOTE: ensure that the arrow printed on the probe clamps corresponds to the current that enters the ELECTRONIC LOAD].

6) connect a current probe to channel 2 of the oscilloscope and hang it on the sensing resistor R_5 of the TPS54160 buck regulator
[NOTE: ensure that the arrow printed on the probe clamps corresponds to the current that exits the inductor towards the output capacitor]

7) connect a voltage probe to channel 3 of the oscilloscope and hang it on TEST PIN TP_{13} which is the output voltage of the TPS54160 buck regulator.
[WARNING: DO NOT INVERT the positive and ground connections of the voltage probe]

Test#1: preparation and procedure

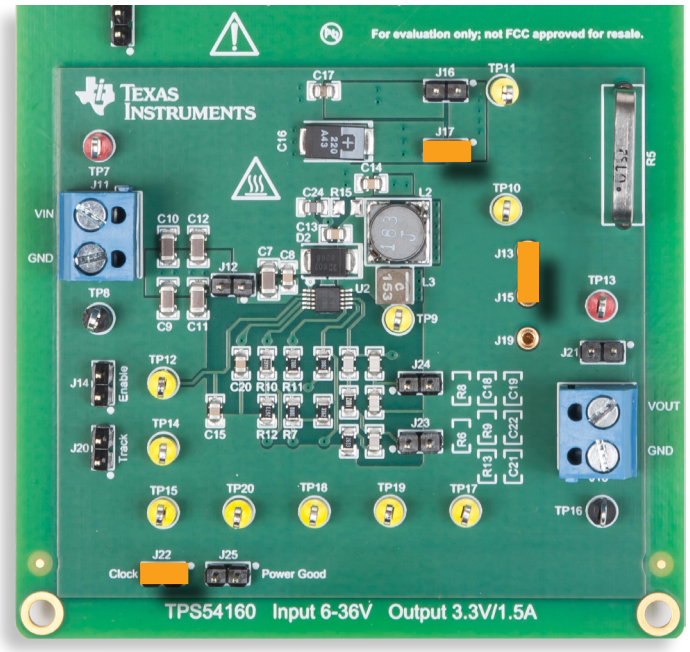

Figure 5. TPS54160 buck board: jumpers set-up for Test#1

Initial jumpers set-up (see Figure 5):

- J_{13}-J_{15} **shorted** → L_2 (18μH, ferrite) inductor connected
- J_{17} **shorted** → C_{16} (220μF) output capacitor connected
- J_{14} **open** → internal signal enabled
- J_{20} **open** → internal soft-start signal enabled
- J_{21} **open** → output capacitor connected to the voltage sensor R_6-R_8
- J_{12} **open** → C_9-C_{12}(4x4.7μF) input capacitors disconnected
- J_{16} **open** → C_{17} (10μF) output capacitor disconnected
- J_{22} **shorted** → switching frequency f_s = 500kHz
- J_{25} **open** → power good signal enabled
- J_{23} **AND** J_{24} **open** → compensation set-up for C_{16} (220μF) output capacitor [NOTE: this is case (a) of Table 1]

Test Procedure:

1) turn on the OSCILLOSCOPE, set the CH-1 and CH-2 in DC 50Ω coupling mode, set the CH-3 in DC 1MΩ coupling mode select CH-2 as trigger source, and execute the "de-gauss" of the current probes (this removes possible dc bias in the current probes)
2) turn on the DC POWER SUPPLY (be sure that the "OUT ON" button is OFF), set the VOLTAGE of the DC POWER SUPPLY at the initial value of 6V, and set the DC POWER SUPPLY CURRENT LIMIT at 1A
3) turn on the ELECTRONIC LOAD (be sure that the "LOAD ON" button is OFF), select the DYNAMIC CURRENT MODE and fix:
   - the low current level at 500mA and the low current time at 5ms
   - the high current level at 1500mA and the high current time at 5ms
   - the highest current rise and fall slew-rates allowed by the instrument
4) turn ON the "OUT ON" button of the DC POWER SUPPLY. Under these conditions you should see on the OSCILLOSCOPE trace of CH-3 (output voltage) a flat horizontal line at 3.3V level. (If you don't read this value, turn OFF the "OUT ON" button of the DC POWER SUPPLY and verify the previous steps)
5) turn ON the "LOAD ON" button of the ELECTRONIC LOAD. Under these conditions, set 2ms/div OSCILLOSCOPE time base and you should see a square -wave trace on CH-1 (load current), a quasi square-wave trace on CH-2 (inductor current) and an almost flat horizontal line on CH-3 trace (output voltage), with 3.3V average level and small magnitude spikes of short duration in correspondence of load current transients. (If you see waveforms much different than the one listed above, turn OFF the "LOAD ON" button of the ELECTRONIC LOAD and the "OUT ON" button of the DC POWER SUPPLY and verify the previous steps)
6) set the CH-3 in AC 1MΩ coupling mode, adjust the vertical scale to expand the output voltage waveform and read the output voltage transient peak surge magnitude for the input voltage values listed in Table 1 (you do not need to turn OFF the "OUT ON" button of the DC POWER SUPPLY while adjusting the voltage)
7) turn OFF the "LOAD ON" button of the ELECTRONIC LOAD and the "OUT ON" button of the DC POWER SUPPLY, then short jumpers J_{23} and J_{24} to change the voltage loop compensation [NOTE: this is case (b) of Table 1] and repeat the steps 4) to 6)
8) at the end of the measurements, turn OFF the "LOAD ON" button of the ELECTRONIC LOAD and the "OUT ON" button of the DC POWER SUPPLY, then switch off all the instruments

Test#1: measure and calculate

1) Measure the magnitude Δv_{out} of output voltage transient surges after the step-up and step-down load transients and collect the results in Table 1.
2) Analyze the results, answer the questions and explain your observations by using the formulae and the information provided in the *Theory Background* section.

Table 1. Load transient performances of the TPS54160 buck regulator vs output capacitor and input voltage.

(1) ΔV_{out} [mV] 0.5A→1.5A	(2) ΔV_{out} [mV] 1.5A→0.5A	case (a): J_{23} and J_{24} op		case (b): J_{23} and J_{24} sh	
V_{in}=6V		(1)	(2)	(1)	(2)
V_{in}=18V		(1)	(2)	(1)	(2)
V_{in}=36V		(1)	(2)	(1)	(2)

Feedback impedance:
J_{24} sh: C_{f1}=C_{19}=27pF;
J_{24} op: C_{f1}=series of $C_{19}$and C_{22}=4pF
J_{23} sh: C_{f2}=C_{18}=6.8nF, R_{f2}=R_9=18kΩ;
J_{23} op: C_{f2}= series of C_{16} and C_{21} =118pF
R_{f2}= series of R_9 and R_{13}=279kΩ

Output capacitor:
J_{16} sh, J_{17} op: C_{out}=C_{17}=10μF, ESR=5mΩ
J_{16} op, J_{17} sh: C_{out}=C_{16}=220μF, ESR=25mΩ

TPS54160:
gm_{ps} = 6A/V
R_{OTA} = 100MΩ
C_{OTA} = 5.7pF
(*see [5] for details about TPS54160*)

Answer:

1. Which setup of the jumpers J_{23} and J_{24} does determine the biggest output voltage surges? ☐ shorted ☐ open ☐ it depends on line voltage
2. Do the voltage surges increase with the line voltage? ☐ yes ☐ no ☐ it depends on compensation setup
3. Are there oscillations in the transient responses? ☐ yes ☐ no ☐ it depends on compensation setup and/or line voltage

Test#2: preparation and procedure

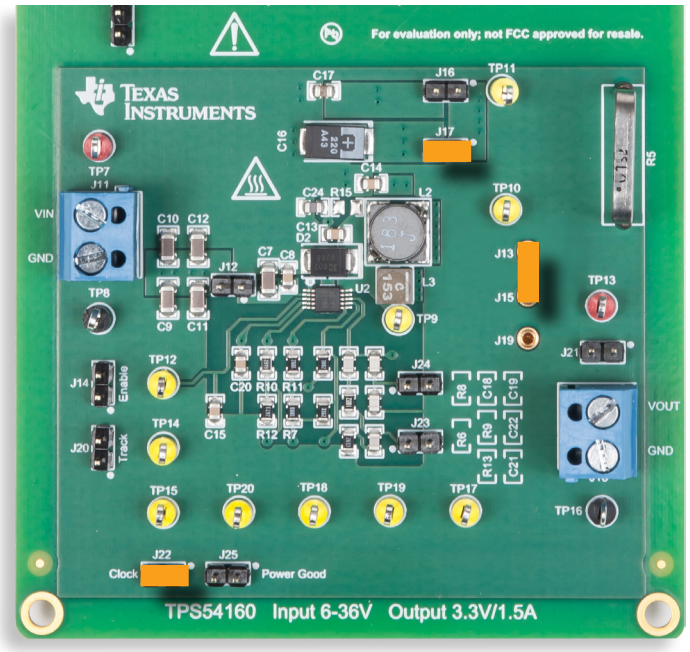

Figure 6. TPS54160 buck board: jumpers set-up for Test#2

Initial jumpers set-up (see Figure 6):

- **J_{13}-J_{15} shorted** → L_2 (18μH, ferrite) inductor connected
- **J_{17} OR J_{16} shorted** → C_{16} (220μF) OR C_{17} (10μF) output capacitor connected
- **J_{14} open** → internal signal enabled
- **J_{20} open** → internal soft-start signal enabled
- **J_{21} open** → output capacitor connected to the voltage sensor R_6-R_8
- **J_{12} open** → C_9-C_{12}(4x4.7μF) input capacitors disconnected
- **J_{22} shorted** → switching frequency **f_s = 500kHz**
- **J_{25} open** → power good signal enabled
- **J_{23} AND J_{24} open OR shorted** → to set-up the desired compensation
  [**NOTE:** see instruction points 1) to 3) in the *Measure and Calculate* section relevant to Test#2, provided in the next page]

Test Procedure:

1) turn on the OSCILLOSCOPE, set the CH-1 and CH-2 in DC 50Ω coupling mode, set the CH-3 in DC 1MΩ coupling mode select CH-2 as trigger source, and execute the "de-gauss" of the current probes
2) turn on the DC POWER SUPPLY (be sure that the "OUT ON" button is OFF), set the VOLTAGE of the DC POWER SUPPLY at the initial value of 12V, and set the DC POWER SUPPLY CURRENT LIMIT at 1A
3) turn on the ELECTRONIC LOAD (be sure that the "LOAD ON" button is OFF), select the DYNAMIC CURRENT MODE and fix:
   - the low current lewel at 500mA and the low current time at 5ms
   - the high current level at 1500mA and the high current time at 5ms
   - the highest current rise and fall slew-rates allowed by the instrument
4) turn ON the "LOAD ON" button of the ELECTRONIC LOAD. Under these conditions you should see on the OSCILLOSCOPE trace of CH-3 (output voltage) a flat horizontal line at 3.3V level. (If you don't read this value, turn OFF the "OUT ON" button of the DC POWER SUPPLY and verify the previous steps)
5) turn ON the "LOAD ON" button of the ELECTRONIC LOAD. Under these conditions, set 2ms/div OSCILLOSCOPE time base and you should see a square-wave trace on CH-1 (load current), a quasi-square-wave trace on CH-2 (inductor current) and an almost flat horizontal line on CH-3 trace (output voltage), with 3.3V average level and small magnitude spikes of short duration in correspondence of load current transients. (If you see waveforms much different than the one listed above, turn OFF the "LOAD ON" button of the ELECTRONIC LOAD and the "OUT ON" button of the DC POWER SUPPLY and verify the previous steps)
6) set the CH-3 in AC 1MΩ coupling mode, adjust the vertical scale to expand the output voltage waveform and read the output voltage transient peak surge magnitude for the input voltage values listed in Table 2 (you do not need to turn OFF the "OUT ON" button of the DC POWER SUPPLY while adjusting the voltage)
7) turn OFF the "LOAD ON" button of the ELECTRONIC LOAD and the "OUT ON" button of the DC POWER SUPPLY, then change jumpers J_{16}, J_{17}, J_{23} and J_{24} to set up the output capacitor and compensation you want to test and repeat the steps 4) to 6).
   [**WARNING:** verify that the output voltage is regulated at 3.3V with CH-3 in DC 1MΩ coupling mode; if it is not regulated, turn OFF the "LOAD ON" button of the ELECTRONIC LOAD and the "OUT ON" button of the DC POWER SUPPLY and verify the set-up and your regulator stability predictions]
8) at the end of the measurements, turn OFF the "LOAD ON" button of the ELECTRONIC LOAD and the "OUT ON" button of the DC POWER SUPPLY, then switch off all the instruments

Test#2: measure and calculate

1) Predict the combinations of output capacitor and compensation that correspond to minimum and maximum voltage loop cross-over frequency in the test conditions required in Table 2. [**NOTE:** use the formulae (1) to (12) provided in the *Theory Background* section, the parameters provided hereafter, and the suggestion provided at point 2 of the *Good to Know* section to plot the loop gain (1) and determine of the cross-over frequency. If you observe that the loop gain phase is below -180° at any frequency where the magnitude is greater than 0dB then the regulator is unstable]
2) For the stable combinations selected at step 1), measure the magnitude Δv_{out} of output voltage transient surges after the step-up and step-down load transients and collect the results in Table 2.
3) Analyze the results, verify your predictions, answer the questions and explain your observations by using the formulae and the information provided in the *Theory Background* section.

Table 2. Load transient performances of the TPS54160 buck regulator vs output capacitor and compensation.

(1) ΔV_{out} [mV] 0.5A→1.5A	(2) ΔV_{out} [mV] 1.5A→0.5A	highest cross-over ω_c: J_{16} = _____ ; J_{17} = _____ ; J_{23} = _____ ; J_{24} = _____		lowest cross-over ω_c: J_{16} = _____ ; J_{17} = _____ ; J_{23} = _____ ; J_{24} = _____	
V_{in}=12V		(1)	(2)	(1)	(2)
V_{in}=24V		(1)	(2)	(1)	(2)
V_{in}=36V		(1)	(2)	(1)	(2)

Feedback impedance:
J_{24} sh: C_{f1}=C_{19}=27pF;
J_{24} op: C_{f1}=series of $C_{19}$and C_{22}=4pF
J_{23} sh: C_{f2}=C_{18}=6.8nF, R_{f2}=R_9=18kΩ;
J_{23} op: C_{f2}= series of C_{16} and C_{21} =118pF
R_{f2}= series of R_9 and R_{13}=279kΩ

Output capacitor:
J_{16} sh, J_{17} op: C_{out}=C_{17}=10µF, ESR=5mΩ
J_{16} op, J_{17} sh: C_{out}=C_{16}=220µF, ESR=25mΩ

TPS54160:
gm_{ps} = 6A/V
R_{OTA} = 100MΩ
C_{OTA} = 5.7pF
(*see [5] for details about TPS54160*)

Answer:

1. How do we get smaller ΔV_{out} surges during load transients? ☐ higher ω_c ☐ lower ω_c ☐ other:_____
2. How do we get higher phase margin in compensated loop gain? ☐ higher $\omega_{pea}/\omega_{zea}$ ☐ lower $\omega_{pea}/\omega_{zea}$ ☐ other:_____
3. How do we get better oscillations damping during load transients? ☐ higher φ_m ☐ lower φ_m ☐ other:_____
4. What is the condition allowing highest cross-over frequency? ☐ higher V_{in} ☐ lower V_{in} ☐ other:_____

Discussion

In Test #1 we are interested in detecting correlations between the load transient response of the TPS54160 buck regulator and the voltage feedback compensation.

The cross-over frequency ω_c of the buck regulator voltage loop gain is determined by the location of the poles and zeros of feedback compensation error amplifier. If the error amplifier is designed to achieve a high cross-over frequency, the loop gain has a higher magnitude over a wider frequency range (the loop gain magnitude is >0 dB from 0 rad/s to ω_c rad/s). This involves that the effects of load perturbances are more strongly magnified by the OP-AMP error amplifier of Figure 1(a), by changing more intensely its output voltage, which is the control voltage V_c in Figure 1(a), thus determining a faster adaptation of the PCC buck regulator inductor current to the load demand (in PCC buck regulator the inductor works like a current source controlled by the voltage V_c). Therefore, a higher crossover frequency ensures a faster response of the PCC buck regulator to load transients. This makes the magnitude of the output voltage transient surges smaller. In fact, the controller reacts faster to the load perturbation and this shortens the duration of the time interval wherein the output capacitor has to sustain the unbalance between the inductor current and the load current.

In ideal PCC buck regulator, the input voltage V_{in} has no influence on the transient response, as the inductor works like a current source controlled by the voltage V_c. In real PCC buck regulator, the input voltage has some little influence on the transient performance, that depends on the ratio between the slope of the current loop compensation ramp of Figure 1 and the slope of the inductor current, which in turn depends on the input voltage V_{in}. The dynamic transient performance improves when this ratio is lower. However, the ratio has to be higher than a lower boundary to prevent the current loop instability. In TPS54160 buck controller the current loop compensation is fixed internally. Refer to TI-PMLK Experiments relevant to BOOST and BUCK-BOOST topologies to get more insight into the influence of the current loop compensation ramp on the dynamic performances of PCC dc-dc regulators.

The oscillations in the load transient response are determined by the phase margin of the compensated loop gain. In theory, a phase margin greater than 52° ensures that the transient surges have no oscillations. The phase margin is influenced by the poles introduced in the loop at one half of switching frequency f_s as consequence of the sampling mechanism inherent to PCC. If the crossover frequency f_c has to be fixed above $f_s/20$ to achieve good transient performance with heavy load perturbations, then the error amplifier has to be designed by accounting for the phase lag effect of sampling poles, and OP-AMP error amplifier gain with more poles and zeros than formula (1) given in the *Theory Background* section could be required.

Given the voltage loop gain T, the cross-over frequency w_c is the value solving the equation $|T(\omega_c)|=1$. An explicit solution of this equation is not available. If the loop gain function is available, the cross-over frequency can be determined by means of tranfer functions Bode Plots MATLAB® capabilities [8], looking at the magnitude 0dB crossing point. If the poop gain function is not available, the loop gain can be measured by means of a network vector analyzer [9] using the 10Ω injection resistor R_7.

In Test #2 we are interested in detecting correlations between the load transient response of the TPS54160 buck regulator and the combination of output capacitor and voltage feedback compensation.

Changing the combination of output capacitor and feedback compensation provides different loop gain crossover and phase margin. If the crossover frequency increases, the load transient response is improved, as the regulator response to the load perturbation is faster. Viceversa, a decrease of the crossover frequency involves a slower response, with consequent increase of the surge magnitude. A lower phase margin speeds up the response but increases the oscillations. The compensation setting with both J_{23} and J_{24} shorted is tailored for $C_{out}=C_{17}=10\mu F$, whereas the compensation with both J_{23} and J_{24} open is tailored for $C_{out}=C_{16}=220\mu F$. In both cases the loop gain has about 45° phase margin at 15kHz cross-over frequency with 36V input voltage and 1.5A load current. When $C_{out}=C_{16}=220\mu F$ is used with J_{23} and J_{24} shorted the regulator is still stable, but the crossover is de-rated down to about 2kHz with 60° phase margin. When $C_{out}=C_{17}=10\mu F$ is used with J_{23} and J_{24} open the regulator is unstable, and the output voltage shows large oscillations around 3.3V. Other combinations of output capacitors C_{16} and C_{17} and compensation (jumpers J_{23} or J_{24} shorted/open) can lead whether to stable or to unstable operation depending on the input voltage and load current. [**NOTE:** for certain combinations of output capacitors and compensation, the regulator can be unstable but you still observe on the oscilloscope the TPS54160 average output voltage to be regulated at 3.3V, with just a larger switching ripple. Expanding the time scale allows you to observe that the switching ripple is not periodic: this is the way the instability can be detected. Also use the inductor current waveform to better observe the instability by means of the non periodic ripple current. Typically, in these unstable cases you also observe that the load transient response is very good, so much that the output voltage surge magnitude is smaller than the peak-to-peak switching ripple (sometime it is invisible)]

Experimental plots

The experimental plot samples in Figures 7 and 8 show the load transient response of the TPS54160 buck regulator with C_{out}=C_{16}=220µF and different compensation set-up.

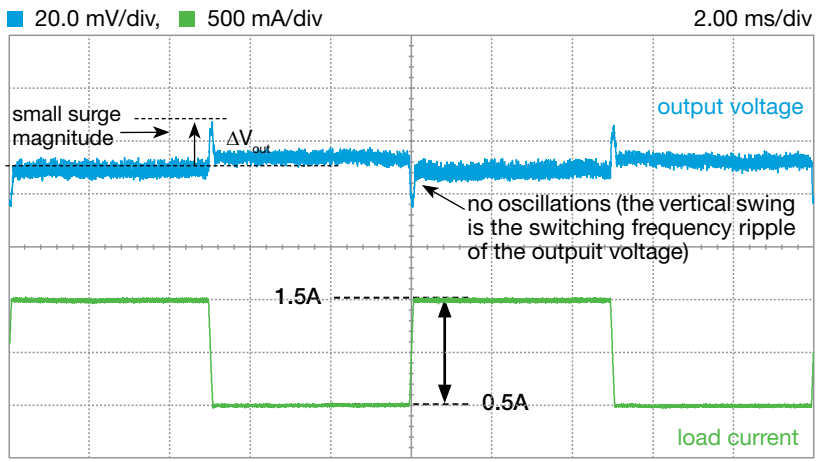

Figure 7. V_{in}=6V, I_{out}=0.5↔1.5A, f_s=500kHz, C_{out}=C_{16}=220µF (electrolytic), J_{23} and J_{24} open

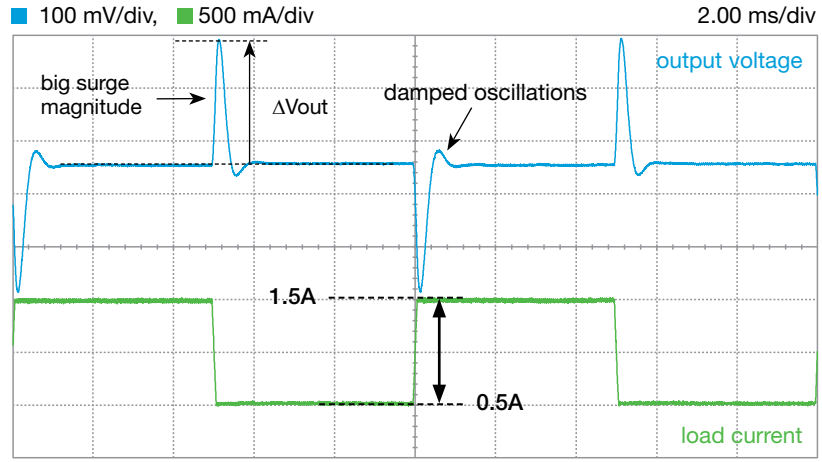

Figure 8. V_{in}=6V, I_{out}=0.5↔1.5A, f_s=500kHz, C_{out}=C_{16}=220µF (electrolytic), J_{23} and J_{24} shorted

The voltage loop gain achieved with C_{out}=C_{16}=220µF and J_{23} and J_{24} both open ensures that the regulator has a nominal phase margin of 52° at the cross-over frequency of 15kHz when input voltage is 36V and the load current is 1.5A. In the test conditions of Figure 7 the input voltage is 6V, whereas in the test conditions of Figure 8 the compensation is set with J_{23} and J_{24} shorted. This determines a little increase of cross-over and phase margin in the test conditions of Figure 7 (*see formulae (1)(5)(6) in the Theory Background section to detect the effect of input voltage on the loop gain*) and a crossover of about 2kHz with 60° phase margin in the test conditions of Figure 8.

The output voltage surges in Figure 7 have about 100mV magnitude and do not exhibit oscillations, whereas the output voltage surges in Figure 8 have about 250mV magnitude and exhibit damped oscillations. The bigger magnitude of surges observed in Figure 8 is due to the low cross-over frequency, that slows the reaction of the error amplifier to the voltage perturbations caused by the load transient, thus lengthening the interval of time where the output capacitor has to sustain the unbalance between the inductor current and the load current. In general the magnitude of the output voltage surges is the result of the combined effect of the size of the output capacitors, of the feedback compensation setup and of the slew rate of the dynamic current determined by the load. The oscillations observed in the test of Figure 8 denote a phase margin lower than the one corresponding to the test of Figure 7.
[**NOTE:** the tests are executed at 6V input voltage].

Experimental plots

The experimental plots in Figures 9 and 10 show the load transient response of the TPS54160 buck regulator with different capacitor and input voltage.

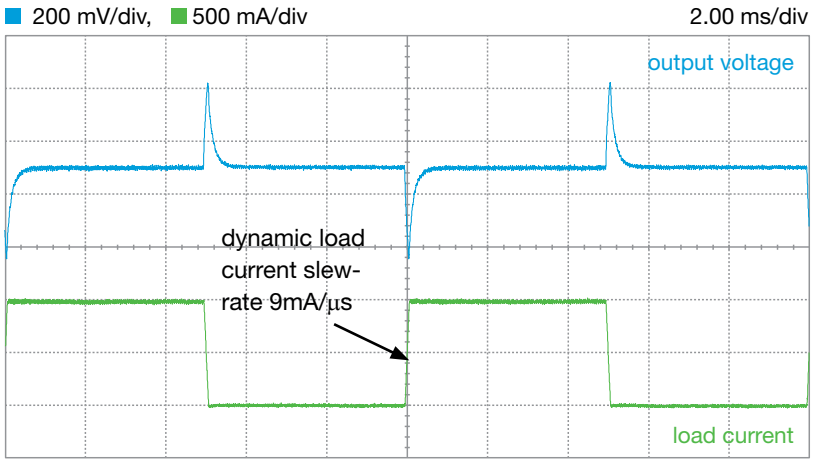

Figure 9. V_{in}=6V, I_{out}=0.5↔1.5A, f_s=500kHz, C_{out}=C_{17}=10µF (ceramic), **J_{23} and J_{24} shorted**

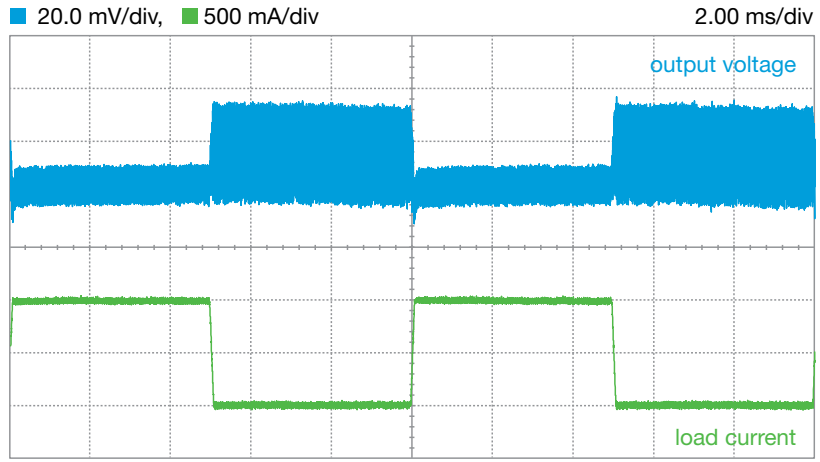

Figure 10. V_{in}=36V, I_{out}=0.5↔1.5A, f_s=500kHz, C_{out}=C_{16}=220µF (electrolytic), **J_{23} and J_{24} open**

The compensation adopted for test of Figure 9 ensures that the regulator has a nominal phase margin of 52° at the cross-over frequency of 15kHz when input voltage is 36V and load current is 1.5A, like for the test of Figure 7. However, the output voltage surges in Figure 9 have about 300mV magnitude, much bigger than the 20mV surges of Figure 7. This proves that we cannot rely just on a high cross-over frequency to limit the output voltage load transiet surges, but we need also a sufficiently big output capacitance to achieve optimum dynamic performance (*see [4] to learn more about the selection of output capacitors for Point of Load regulators subjected to fast load transients*). As remarked in the previous page, the magnitude of output voltage surges is influenced by the slew rate of the dynamic current generated by the DC electronic load. In the test of Figure 9 the slew-rate is 9mA/µs. In theory, setting a dynamic load current slew rate higher than 10mA/µs when C_{out}=10µF and both J_{23} and J_{24} are shorted, would make the the magnitude of output voltage surges bigger. If you really make this test with the TPS54160, the output voltage waveform will look affected by high-frequency oscillations during the interval where the load current is low. This is the effect of the overvoltage protection feature of the TPS54160. The TPS54160 has an Over Voltage (OV) comparator, that is activated when the output voltage is greater than 109% of the nominal voltage, that is about 300mV when V_{out} nominal is 3.3V. When the OV comparator is activated, the high-side MOSFET is turned off and masked from turning on until the output voltage is lower than 107% of the V_{out} nominal.

Comparing Figure 10 with Figure 7 allows to observe the effect of increasing the input voltage. The output voltage peak-to-peak ripple is much bigger in Figure 10 than in Figure 7 (*see Experiment 2 to refresh the correlations between input voltage and output voltage peak-to-peak ripple in buck converter*), whereas the magnitude of output voltage load transient surges is almost the same. This last property is the effect of PCC, that makes the buck regulator very little sensitive the input voltage.

Experiment 4

The goal of this experiment is to analyze the way the operating conditions influence the current ripple and voltage ripple of a buck regulator, depending on the type of core material of the inductor and on core saturation. The TPS54160 buck regulator is used for this experiment.

Case Study

The goal of this experiment is to investigate the impact of the saturation of power inductor core on the current ripple and voltage ripple in the buck regulator. The different behavior of ferrite cores vs powdered iron cores is emphasized.

Figure 1 shows a simplified schematic of the buck regulator with the waveforms of inductor current, output capacitor current and output voltage highlighted. The current of the power inductor in the buck converter is expected to have a triangular waveshape. The peak-peak current ripple magnitude Δi_{pp} depends on line voltage V_{in}, output voltage V_{out}, switching frequency f_s and inductance L. This is true when the inductance L is a constant. The inductance of a real inductor is not a constant, as it depends on the instantaneous current $i_L(t)$ in the component. As shown in the *Theory Background* section, due to the saturation of the magnetic core, the inductance L decreases when the intensity of the current increases. The way an inductor saturates depends on the material of the magnetic core and on the operating conditions. The input voltage and output voltage of the converter, the switching frequency and the load current can make the ripple of the current into the inductor L different than the expected triangular waveform, thus influencing also the ripple of the output capacitor C_{out} and more generally the current stress of all the power components in the converter.

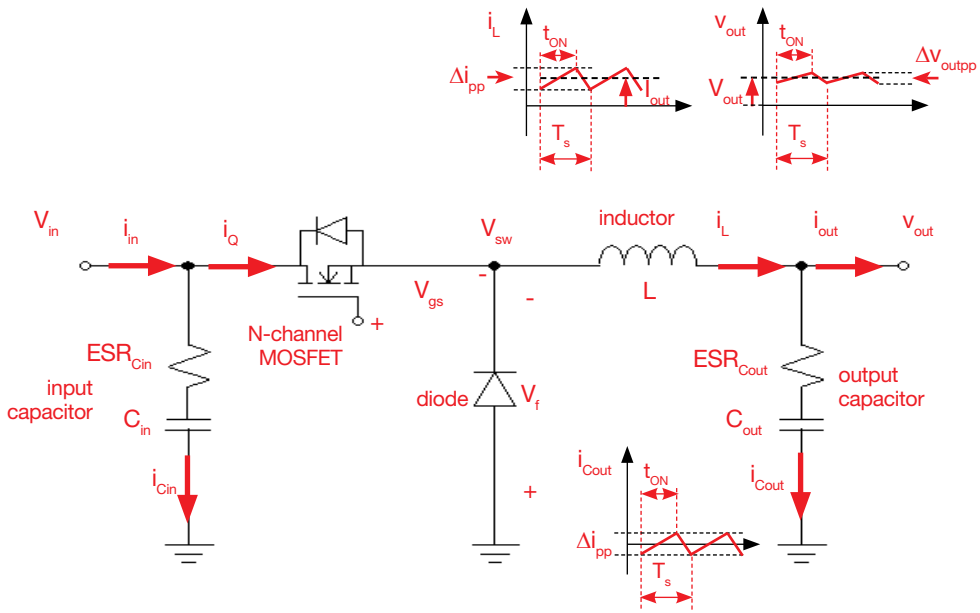

Figure 1. Buck converter simplified schematic

Test#1. We measure the inductor current ripple and the output voltage ripple determined by the two optional inductors available in the TPS54160 buck regulator, for different input voltage and load current conditions. The goal is to emphasize the different saturation behavior of powdered vs ferrite inductor with respect to the increase of the average current.

Test#2. We use the experimental measurements of Δi_{pp}, V_{in}, V_{out}, and f_s to estimate the value of the inductance of the two inductors, for different values of the input voltage, load current and switching frequency.

Theory Background

Ferrite-core and powder-core power inductors exhibit different saturation behavior. The following simplified forlumae provide the inductance value vs the current. (*see [5] for more details on TPS54160 operation and features*)

Ferrite inductors

In **ferrite core inductors**, the dynamic inductance is non linearly decreasing while the current increases, as shown in Figure 2. The inductance vs current law can be approximated by means of the equation (1), where L_{sat} is the inductance of fully saturated inductor, $I_{50\%}$ is the current such that $L(I_{50\%})=0.50\ (L_{nom}+L_{sat})$, and the factor σ is dependant on inductor type, core material and temperature.

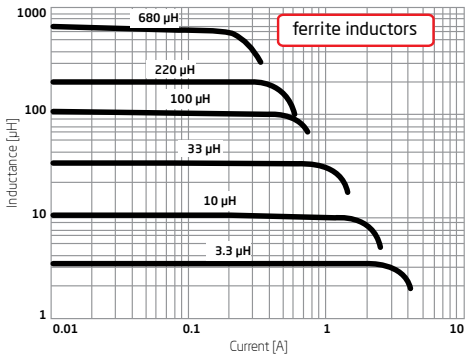

Figure 2

$$(1)\quad L_d \cong L_{sat} + (L_{nom} - L_{sat})\left[\frac{1}{2} - \frac{\tan^{-1}\left[\sigma\left(I - I_{50\%}\right)\right]}{\pi}\right]$$

Powder inductors

In **powder iron core inductors**, the dynamic inductance decreases almost linearly while the current increases, as shown in Figure 3.

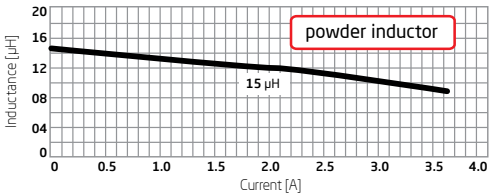

Figure 3

The inductance vs current law can be simplified as shown in equation (2):

$$(2)\quad L_d \cong L_{nom} - \frac{L_{nom} - L_{30\%}}{I_{30\%}} I$$

where L_{nom} is the nominal inductance at zero current and $I_{30\%}$ is the 30% saturation current such that $L(I_{30\%})=0.70L_{nom}$.

Good to Know

1 The dynamic inductance L_d is commonly used in the inductor equation $V = L_d\ dI/dt$, where V is the inductor voltage and I is the inductor current. The inductor is also characterized by a static inductance, which is the parameter used in the inductor equation $\Phi = L_s I$, where Φ is the magnetic flux. For a linear inductor it is $L_d=L_s$. For a non linear inductor it is $L_d = L_s + I\ dL_s/dI$. Inductors manufacturers provide the L_d vs I curve. Circuit simulators may need the L_s vs I curve. The L vs I curve depend on core materials, on the temperature and on manufacturing tolerances. Given the inductance L_d of a linear inductor, its peak-to-peak current ripple is given by the formula $\Delta i_{pp} = (V_{in}-V_{out})V_{out}/(V_{in} f_s L_d)$. Inverting this formula yields $L_d = (V_{in}-V_{out})V_{out}/(V_{in} f_s \Delta i_{pp})$, which can be used to estimate L_d given the values Δi_{pp}, V_{in}, V_{out}, and f_s. 2 Figures 4 and 5 show that a powder inductor with a nominal inductance of 15µH may yield, at heavy load current, a smaller current ripple than a ferrite inductor with a nominal inductance of 18µH, whereas at light load current it is the contrary. The L vs I curves of the two inductors shown in Figure 6 highlight that this behavior is determined by the different way the powder core and the ferrite core inductor saturate. In fact, the powder inductor inductance is higher than the ferrite core at high current.

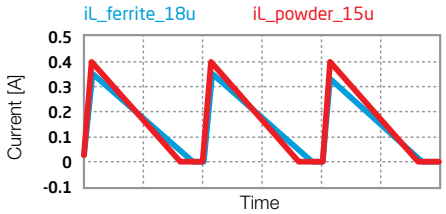

Figure 4. I=0.15A

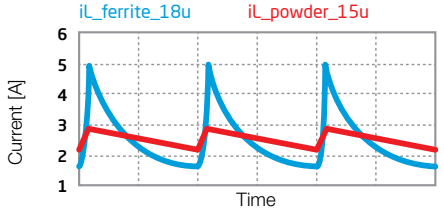

Figure 5. I_{load}=2.5A

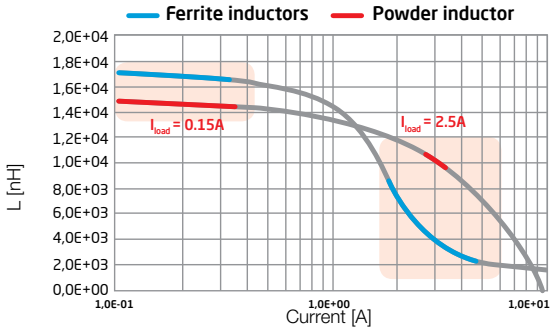

Figure 6

Experiment set-up configuration

The instruments needed for this experiment are: a DC POWER SUPPLY, an OSCILLOSCOPE and a DC ELECTRONIC LOAD. Figure 7 shows the instruments connections. Follow the instructions provided in next page to set-up the connections.

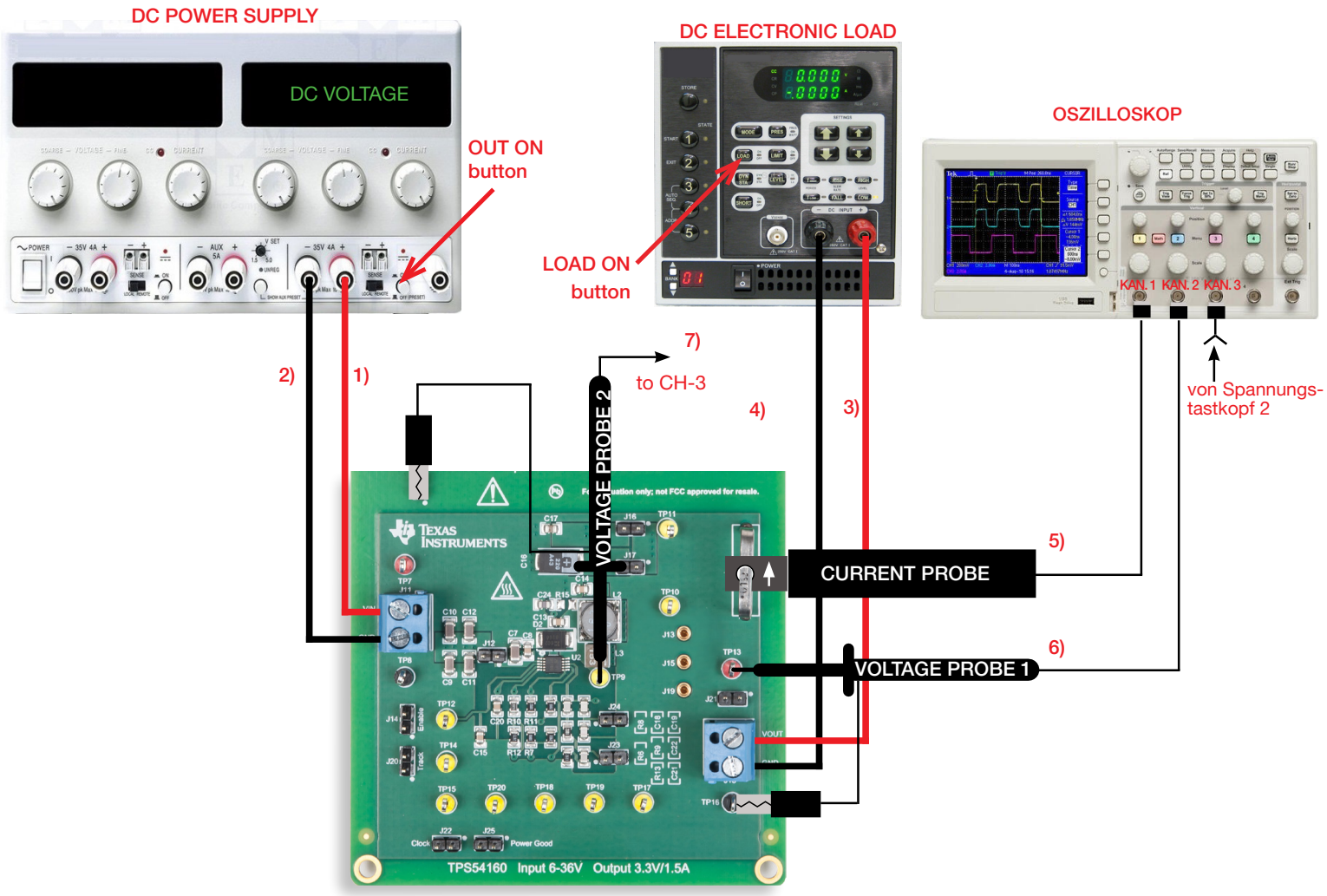

Figure 7. Experiment set-up.

Experiment set-up instructions

With all the instruments turned off, make the following connections:

1) connect the POSITIVE (RED) OUTPUT of the DC POWER SUPPLY to the INPUT (VIN) of the J_{11} screw terminal of the TPS54160 buck regulator

2) connect the NEGATIVE (BLACK) OUTPUT of the DC POWER SUPPLY to the GROUND (GND) of the J_{11} screw terminal of the TPS54160 buck regulator

3) connect the OUTPUT (VOUT) of the J_{18} screw terminal of the TPS54160 buck regulator to the POSITIVE (RED) INPUT of the ELECTRONIC LOAD

4) connect the NEGATIVE (BLACK) INPUT of the ELECTRONIC LOAD to the GROUND (GND) of the J_{18} screw terminal of the TPS54160 buck regulator

5) connect a current probe to channel 1 of the OSCILLOSCOPE and hang it on the sensing resistor R_5 of the TPS54160 buck regulator
[NOTE: ensure that the arrow printed on the probe clamps corresponds to the current that exits the inductor towards the output capacitor]

6) connect a voltage probe to channel 2 of the OSCILLOSCOPE, hang its positive tip to TEST PIN TP_{13} which is the output voltage of the TPS54160 buck regulator
[WARNING: **DO NOT INVERT** the positive and ground connections of the voltage probe]

7) connect a voltage probe to channel 3 of the OSCILLOSCOPE and hang it on the TEST PIN TP_9 which is the switching node voltage of the TPS54160 buck regulator

Test#1: preparation and procedure

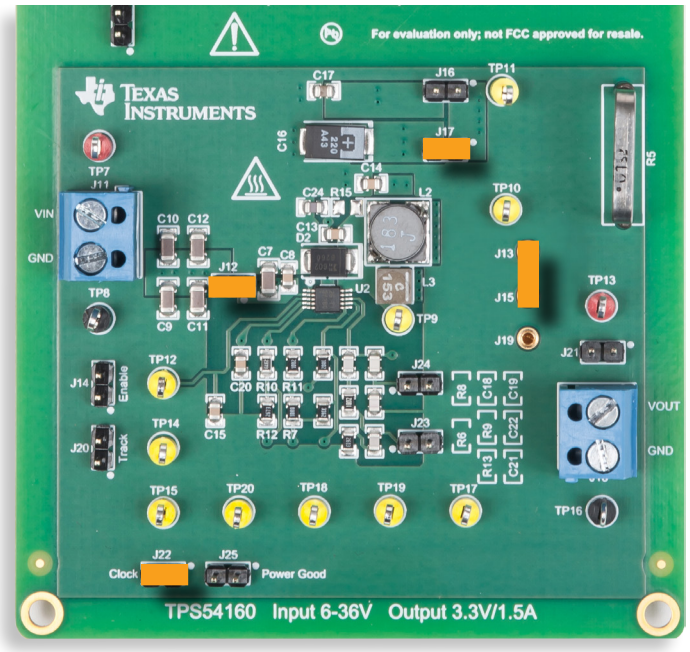

Figure 8. TPS54160 buck board: jumpers set-up for Test#1

Initial jumpers set-up (see Figure 8):

- J_{13}-J_{15} **shorted** → L_2 (18μH, ferrite) inductor connected
- J_{17} **shorted** → C_{16} (220μF) output capacitor connected
- J_{14} **open** → internal signal enabled
- J_{20} **open** → internal soft-start signal enabled
- J_{21} **open** → output capacitors connected to voltage sensor R_6-R_8
- J_{12} **shorted** → C_9-C_{12} (4x4.7μF) input capacitors connected
- J_{16} **open** → C_{17} (10μF) output cap disconnected
- J_{22} **shorted** → switching frequency f_s = 500kHz
- J_{23} **and** J_{24} **open** → compensation for C_{16} (220μF) output capacitor
- J_{25} **open** → power good signal enabled

Test Procedure:

1) turn on the OSCILLOSCOPE, set the CH-1 and CH-3 in DC 1MΩ and CH-2 in DC 50Ω coupling mode, select CH-3 as trigger source, and execute the "de-gauss" of the current probe to remove possible dc bias in the current probe
2) turn on the DC POWER SUPPLY (ensure that the "OUT ON" button is OFF), set the VOLTAGE at the initial value 12V, and set the CURRENT LIMIT at 1A
3) turn on the ELECTRONIC LOAD (be sure that the "LOAD ON" button is OFF), set the CONSTANT CURRENT MODE, and set the current at 0.15A
4) turn ON the "OUT ON" button of the DC POWER SUPPLY. Under these conditions you should see the output voltage on CH-1 trace of the OSCILLOSCOPE as a flat horizontal line at 3.3V level and the switching node voltage on CH-3 trace as a square-wave swinging between the input voltage and a slightly negative voltage. (If the waveforms do not look as described above, turn OFF the "OUT ON" button of the DC POWER SUPPLY and verify the previous steps)
5) turn ON the "LOAD ON" button of the ELECTRONIC LOAD. Under these conditions you should see on the OSCILLOSCOPE a triangular waveshape with 0.15A average value on channel 2 (inductor current), and a flat horizontal line at 3.3V level on CH-1 (output voltage). (If you read values much different than the one listed above, turn OFF the "LOAD ON" button of the ELECTRONIC LOAD and the "OUT ON" button of the DC POWER SUPPLY and verify the previous steps)
6) read the output voltage and the inductor current peak-to-peak ripple magnitudes, record the values in Table 1, and repeat this step for all the values of the load current and input voltages listed in Table 1 (you do not need to turn OFF the DC POWER SUPPLY "OUT ON" button and the ELECTRONIC LOAD "LOAD ON" button while changing the input voltage and the load current)
7) turn OFF the "OUT ON" button of the ELECTRONIC LOAD and the "OUT ON" button of the DC POWER SUPPLY, then open jumper J_{13}-J_{15} to disconnect inductor L_2 (ferrite core, 18μH) and short jumper J_{15}-J_{19} to connect inductor L_3 (powdered core, 15μH) and repeat the steps 4) to 6)
8) at the end of the measurements, turn OFF the "OUT ON" button of the ELECTRONIC LOAD and the "OUT ON" button of the DC POWER SUPPLY, then switch off all the instruments

Test#1: measure and calculate

1) Measure the peak-to-peak output voltage ripple Δv_{outpp} and the peak-to-peak inductor current ripple Δi_{pp} and collect the results in Table 1.
2) Analyze the results, answer the questions and explain your observations by using the inductance vs current formulae and the information provided in the *Theory Background* section.

Table 1. Output voltage ripple and inductor current ripple of the TPS54160 buck regulator vs load current and input voltage.

(1) Δv_{outpp}	(2) Δi_{pp}	L= L_2 (J_{13}-J_{15} shorted)						L= L_3 (J_{15}-J_{19} shorted)					
		I_{out}						I_{out}					
		0.15A		0.75A		1.5A		0.15A		0.75A		1.5A	
V_{in} = 12V		(1)	(2)	(1)	(2)	(1)	(2)	(1)	(2)	(1)	(2)	(1)	(2)
V_{in} = 18V		(1)	(2)	(1)	(2)	(1)	(2)	(1)	(2)	(1)	(2)	(1)	(2)
V_{in} = 24V		(1)	(2)	(1)	(2)	(1)	(2)	(1)	(2)	(1)	(2)	(1)	(2)

Inductors:

L_2 (ferrite, J_{13}-J_{15} shorted):
L_{nom}=18µH σ=3.22
L_{sat}=1µH, $I_{50\%}$=1.5A

(use the partcode to visit the manufacturer web-site for more details on L_2)

L_3 (powder, J_{15}-J_{19} shorted):
L_{nom} =15µH, $L_{30\%}$ =10.5µH,
$I_{30\%}$ =2.8A

(use the partcode to visit the manufacturer web-site for more details on L_3)

Output capacitor:
J_{16} sh, J_{17} op: C_{out}=C_{17}=10µF, ESR=5mΩ
J_{16} op, J_{17} sh: C_{out}=C_{16}=220µF, ESR=25mΩ

Switching frequency:
J_{22} shorted: f_s = 500kHz
J_{22} open: f_s = 250kHz

Answer:

1. How does the ripple current change if load current increases? ☐ increases ☐ decreases ☐ it depends on line voltage
2. Does the ripple current look like a triangular waveform? ☐ yes ☐ no ☐ it depends on load current
3. Which inductor does determine the highest ripple current? ☐ L_2 ☐ L_3 ☐ it depends on line voltage and load current

Test#2: preparation and procedure

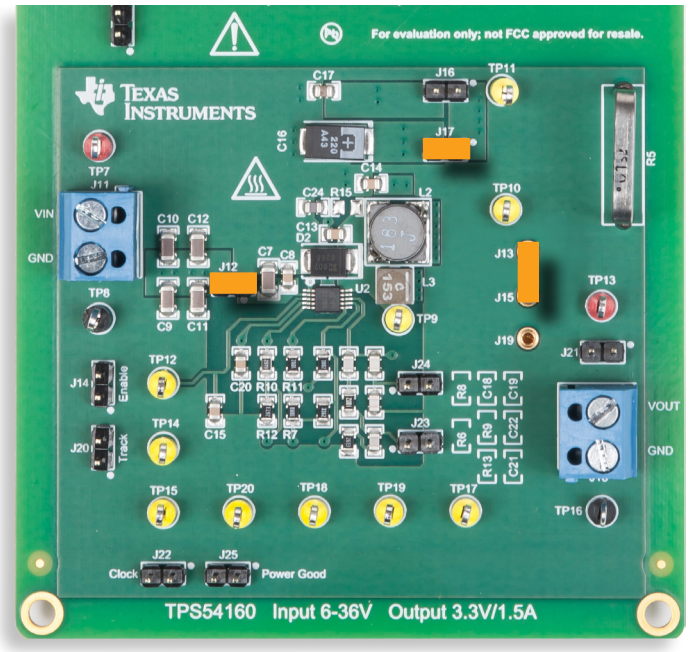

Figure 9. TPS54160 buck board: jumpers set-up for Test#2

Initial jumpers set-up (see Figure 9):

- J_{13}-J_{15} **shorted** → L_2 (18μH, ferrite) inductor connected
- J_{17} **shorted** → C_{16} (220μF) output cap connected
- J_{14} **open** → internal signal enabled
- J_{20} **open** → internal soft-start signal enabled
- J_{21} **open** → output caps connected to voltage sensor R_6-R_8
- J_{12} **shorted** → C_9-C_{12} (4x4.7μF) input caps connected
- J_{16} **open** → C_{17} (10μF) output cap disconnected
- J_{22} **open** → switching frequency f_s = 250kHz
- J_{23} **and** J_{24} **open** → compensation for C_{16} (220μF) output cap
- J_{25} **open** → power good signal enabled

Test Procedure:

1) turn on the OSCILLOSCOPE, set the CH-1 and CH-3 in DC 1MΩ and CH-2 in DC 50Ω coupling mode, select CH-3 as trigger source, and execute the "de-gauss" of the current probe to removes possible DC bias in the current probe
2) turn on the DC POWER SUPPLY (be sure that the "OUT ON" button is OFF), set the VOLTAGE at 6V, and set the CURRENT LIMIT at 1A
3) turn on the ELECTRONIC LOAD (be sure that the "LOAD ON" button is OFF), set the CONSTANT CURRENT MODE, and set the current at 1A
4) turn ON the "OUT ON" button of the DC POWER SUPPLY. Under these conditions you should see the output voltage on CH-1 trace of the OSCILLOSCOPE as a flat horizontal line at 3.3V level and the switching node voltage on CH-3 trace as a square-wave swinging between the input voltage and a slightly negative voltage. If the waveforms do not look as described above, turn OFF the "OUT ON" button of the DC POWER SUPPLY and verify the previous steps
5) turn ON the "LOAD ON" button of the ELECTRONIC LOAD. Under these conditions you should see on the OSCILLOSCOPE a triangular waveshape with 1A average value on CH-2 (inductor current), and a flat horizontal line at 3.3V level on CH-1 (output voltage). (If you read values much different than the one listed above, turn OFF the "LOAD ON" button of the ELECTRONIC LOAD and the "OUT ON" button of the DC POWER SUPPLY and verify the previous steps)
6) read the output voltage and the inductor current peak-to-peak ripple, record the values in Table 1, and repeat this step for all the values of the load current and input voltage listed in Table 1 (you do not need to turn OFF the "OUT ON" button of the DC POWER SUPPLY and the "LOAD ON" button of the ELECTRONIC LOAD while changing the input voltage and the load current)
7) turn OFF the "LOAD ON" button of the ELECTRONIC LOAD and the "OUT ON" button of the DC POWER SUPPLY, then open jumper J_{13}-J_{15} to disconnect inductor L_2 (ferrite core, 18μH) and short jumper J_{15}-J_{19} to connect inductor L_3 (powdered core, 15μH) and repeat the steps 2) to 6)
8) turn OFF the "LOAD ON" button of the ELECTRONIC LOAD and the "OUT ON" button of the DC POWER SUPPLY, then short jumper J_{22} to set-up switching frequency f_s = 500kHz and repeat the steps 2) to 7)
9) at the end of the measurements, turn OFF the "LOAD ON" button of the ELECTRONIC LOAD and the "OUT ON" button of the DC POWER SUPPLY, then switch off all the instruments

Test#2: measure and calculate

1) Measure the peak-to-peak inductor current ripple Δi_{pp}, calculate the equivalent inductance by means of the formula $L_d = (V_{in}-V_{out})V_{out}/(V_{in}f_s\Delta i_{pp})$ and collect the results in Table 2 and 3 for the two operating switching frequencies f_s=250kHz and f_s=500kHz respectively.
2) Analyze the results, answer the questions and explain your observations by using the inductance vs current formulae and the information provided in the *Theory Background* section.

Table 2. Inductor current ripple and estimated inductance for TPS54160 buck regulator operating at f_s=250kHz.

(1) Δi_{pp} measured	(2) L [µH] estimated	L= L_2 (J_{13}-J_{15} shorted)						L= L_3 (J_{15}-J_{19} shorted)					
		I_{out}=1A		I_{out}=1.5A		I_{out}=2.0 A		I_{out}=1A		I_{out}=1.5A		I_{out}=2.0A	
V_{in} = 6V		(1)	(2)	(1)	(2)	(1)	(2)	(1)	(2)	(1)	(2)	(1)	(2)
V_{in} = 36V		(1)	(2)	(1)	(2)	(1)	(2)	(1)	(2)	(1)	(2)	(1)	(2)

Table 3. Inductor current ripple and estimated inductance for TPS54160 buck regulator operating at f_s=500kHz.

(1) Δi_{pp} measured	(2) L [µH] estimated	L= L_2 (J_{13}-J_{15} shorted)						L= L_3 (J_{15}-J_{19} shorted)					
		I_{out}=1A		I_{out}=1.5A		I_{out}=2.0 A		I_{out}=1A		I_{out}=1.5A		I_{out}=2.0A	
V_{in}=6V		(1)	(2)	(1)	(2)	(1)	(2)	(1)	(2)	(1)	(2)	(1)	(2)
V_{in}=36V		(1)	(2)	(1)	(2)	(1)	(2)	(1)	(2)	(1)	(2)	(1)	(2)

Inductors:

L_2 (ferrite, J_{13}-J_{15} shorted):
L_{nom}=18µH σ=3.22
L_{sat}=1µH, $I_{50\%}$=1.5A
(use the partcode to visit the manufacturer web-site for more details on L_2)

L_3 (powder, J_{15}-J_{19} shorted):
L_{nom} =15µH, $L_{30\%}$ =10.5µH,
$I_{30\%}$ =2.8A
(use the partcode to visit the manufacturer web-site for more details on L_3)

Output capacitor:
J_{16} sh, J_{17} op: C_{out}=C_{17}=10µF, ESR=5mΩ
J_{16} op, J_{17} sh: C_{out}=C_{16}=220µF, ESR=25mΩ

Switching frequency:
J_{22} shorted: f_s = 500kHz
J_{22} open: f_s = 250kHz

Answer:

1. How does the equivalent inductance change if the load current increases? ☐ increases ☐ decreases ☐ it depends on line voltage

2. Predict the inductor ensuring the smallest ripple current in the following operating conditions and verify by means of measurements:
   I_{out}=0.5A, V_{in}=24V, f_s=250kHz: ☐ L_2 ☐ L_3
   I_{out}=1.5A, V_{in}=12V, f_s=500kHz: ☐ L_2 ☐ L_3

Discussion

In Test #1 we are interested in detecting the correlations between the peak-to-peak ripple of inductor current, the peak-to-peak ripple of output voltage and the operatingconditions, in terms of input voltage and load current, taking into account the saturation of the inductor which is influenced by the material of the magnetic core.

In the *Experiment 2*, we have already analyzed the influence of the operating conditions on the peak-to-peak ripple of the inductor current. The property we investigate here is the saturation of the inductors, especially the ferrite core one. In particular, what we observe is that the magnitude of the peak-to-peak inductor current ripple increases while the load current increases. This is determined by the saturation of the inductor. The relative increase of the ripple magnitude is higher for ferrite inductor than for powder inductor. The origin of this difference is in the type of the material the magnetic core is made of.

The core of ferrite inductors is made of a compact material, the ferrite indeed, which is a compound of Iron oxide and other elements like Manganese and Zinc. Ferrites may have different properties depending on the specific compound recipe. In general, the ferrites magnetic permeability is high at low level of the magnetic field H (which is proportional to the current flowing into the inductor winding), and decreases more and more rapidly while the magnetic field increases, due to the magnetization of the material. This is the reason why ferrite inductors show a sharp saturation, as represented in Figure 2 and described by equation (1) in the *Theory Background* section.

The core of powder inductors is made of a micro-granular material, composed of small particles of alloys containing elements like Iron, Nickel, and Molybdenum, that is compressed and takes the aspect and consistency of a compact material. The residual small air holes trapped among the material particles create a sort of distributed air gap throughout the material. The global effect of the distributed air gap is to reduce the equivalent permeability of the material, and to linearize its dependence on the magnetic field strength. This is why the powder inductors saturate linearly and more softly than ferrite inductors while the current flowing through the inductor winding increases, as represented in Figure 3 and described by equation (2) in the *Theory Background* section.

A higher input voltage facilitates the inductor saturation, as it determines a bigger volt x second product, which in turn increases the peak-to-peak inductor current ripple. The levels of load current selected for the Test#1 allow to explore different regions of operation for the two optional inductors available in the TPS54160 buck regulator, in terms of value of the inductance as a function of the current. At low load current the powdered iron core inductor provides a higher current ripple compared to the ferrite core inductor, whereas at high load current the situation is reversed.

In Test #2 we are interested in estimating the equivalent inductance of the inductors, taking into account the saturation of the inductor which is influenced by the material of the magnetic core.

The three levels of load current selected for Test#2 allow to explore the region of operation for the two inductors where their saturation is more evident, thus causing a more evident decrease of the equivalent inductance. The experimental plots of Figures 10 and 11 show that, when the load current is low, the waveform of the two inductors look triangular. The plot of Figure 12 shows instead that, when the current is high, the current waveform of the ferrite inductor is no more triangular and is characterized by a cuspid form. The equivalent inductance of the inductor is in this case much lower than its nominal value. This is the effect of the sharp saturation affecting ferrite cores. The waveform of the powder inductor current shown in Figure 13, instead, keeps triangular even though the current is high, and its equivalent inductance does not drop sharply, as a consequence of the much softer saturation.

[NOTE: It is possible that at a certain current around 2A the internal current limit of the TPS54160 chip shuts down the buck regulator. Should this happen, turn OFF the ELECTRONIC LOAD “LOAD ON” button and the DC POWER SUPPLY “OUT ON” button and restart the test by limiting the maximum test current to a lower value. See the *Experiment 5* to get insight into the effects of inductors saturation on current limit action]

Experimental plots

The experimental plot samples collected in this page show the inductor current and output voltage waveforms of the TPS54160 buck regulator in different operating conditions.

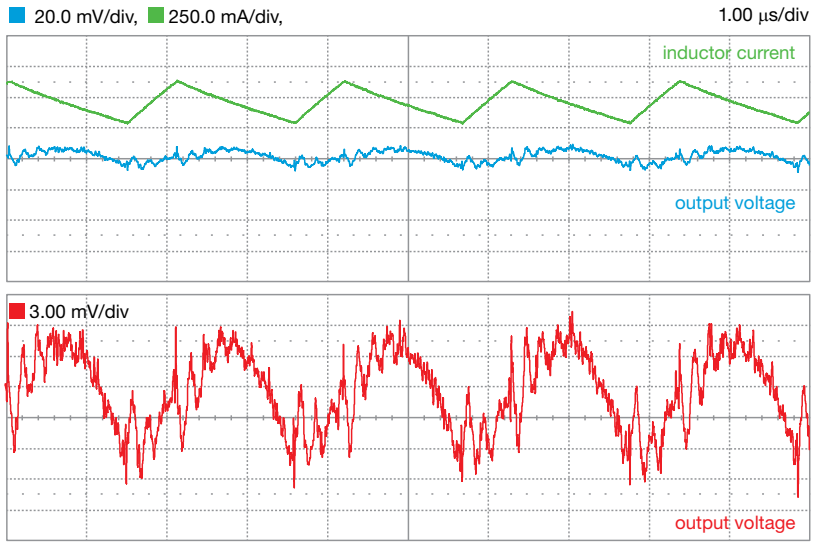

Figure 10. V_{in}=12V, I_{out}=0.15A, f_s=500kHz, L= L_2 = 18µH (ferrite inductor)

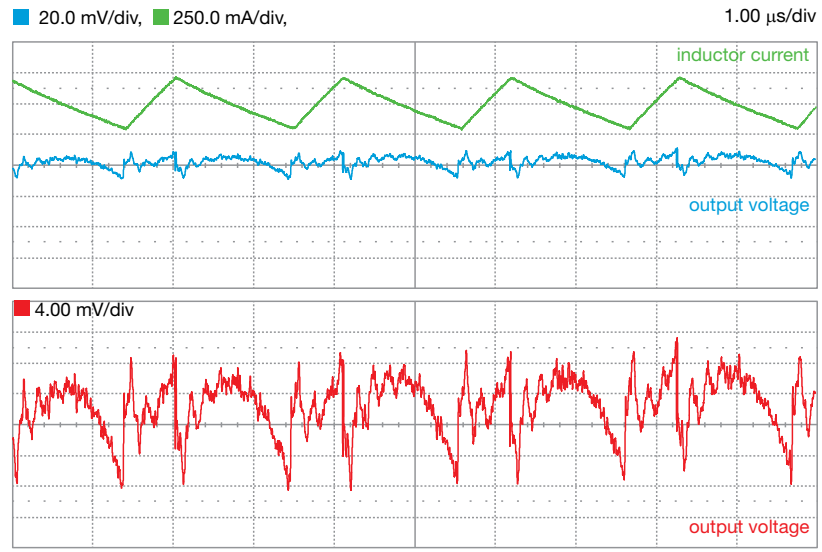

Figure 11. V_{in}=12V, I_{out}=0.5A, f_s=500kHz, L= L_3 = 15µH (powder inductor)

The waveforms in Figures 10 and 11 are typical of inductors in switching mode power supplies working with an average value of the current and with a peak-to-peak ripple sufficiently small to not involve a visible effect of saturation.

In reality, even under these conditions the inductance of both inductors is smaller than its nominal value. This can be proved by applying the formula provided in *Theory Background* section and used in the Test#2, which allows to estimate the equivalent inductance of an inductor based on the measured value of the input voltage V_{in}, the output voltage V_{out}, the switching frequency f_s and the peak-to-peak current ripple Δi_{pp}.

Inductor saturation is not a phenomenon that occurs suddenly when the current exceeds a certain threshold. Rather, it is a progressive smooth phenomenon that starts as soon as the inductor carries a current, and that becomes more and more evident while the current increases.

Experimental plots

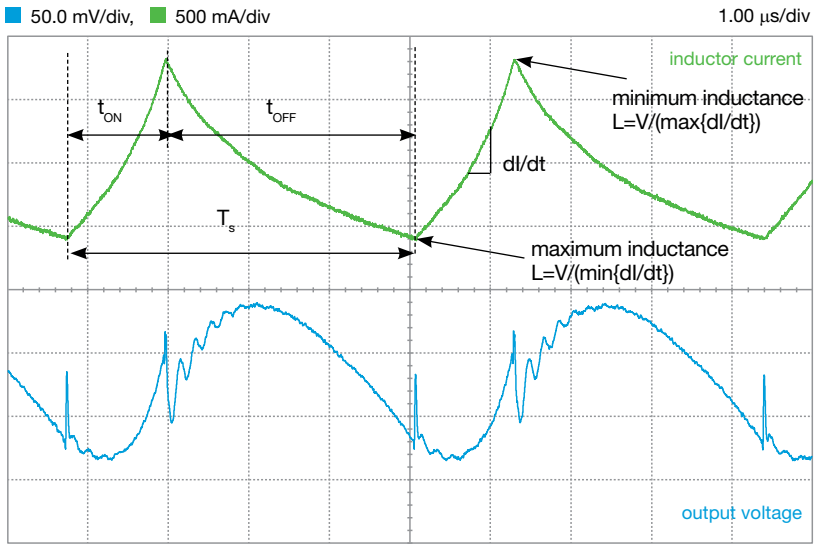

Figure 12. V_{in}=12V, I_{out}=1.9A, f_s=250kHz, L = L_2 = 18µH (ferrite inductor)

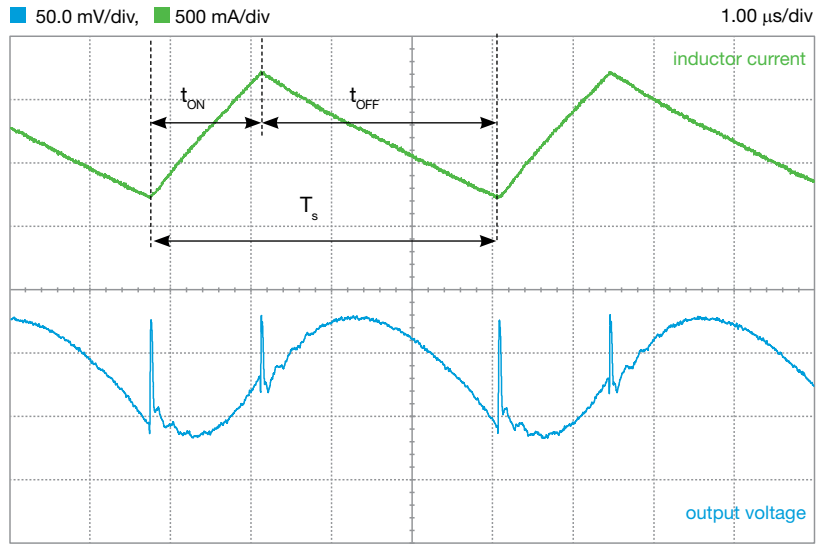

Figure 13. V_{in}=12V, I_{out}=2.25A, f_s=250kHz, L = L_3 = 15µH (powder inductor)

The green waveform in Figure 12 is typical of ferrite inductors in switching mode power supplies working with an average value of the current and with a peak-to-peak ripple sufficiently big to involve a visible effect of saturation. In these conditions the inductance of the ferrite inductor is much smaller than its nominal value and it also changes during the switching period because it works in the region of the L vs I curve where the inductance rolls-off sharply. The inductance is therefore maximum at the beginning of the period (where the derivative of the current dI/dt is minimim) and minimum at the end of the ON time of the MOSFET (where the derivative of the current dI/dt is maximum).

Comparing Figure 13 with Figure 12 highlights that the powder inductor involves a smaller ripple, although its nominal inductance is smaller than the one of the ferrite inductor (15µH vs 18µH) and the current it is sustaining is higher than the one of the ferrite inductor (2.25A vs 1.9A). Output voltage ripple (blue trace) is also smaller, as we may expect, cosidering that the output capacitor has to bypass a smaller inductor current ripple.

[NOTE: observing carefully Figures 12 and 13 you can notice that the ON time of the MOSFET in Figure 13 is a bit longer than in Figure 12, although the input voltage is the same. This is the effect of the higher current and of the consequent higher losses of the buck converter determined by the higher current, which causes an increase of the duty-cycle]

Experiment 5

The goal of this experiment is to analyze how the inductor influences the current limit of a buck regulator, depending on the effect of magnetic core saturation. The TPS54160 buck regulator is used for this experiment.

Case Study

The goal of this experiment is to investigate how the type of inductor may influence the current limit action, due to the effect of magnetic core saturation.

Figure 1 shows a simplified schematic of the buck regulator, emphasizing that the inductor operates like a current source linearly controlled by the control voltage V_c (which is the TPS54160 COMP PIN voltage) such that $i_L = g_{mps} V_c$, where gm_{ps} is the trans-conductance of the Peak-Current-Control (PCC) buck regulator. This behavior is determined by the TPS54160 PCC operation, as discussed in *Experiment 3*. When the load current increases, an output voltage drop is sensed by the voltage sensor, and the TPS54160 PCC drives an increase of the feedback control voltage V_c, thus increasing the average inductor current. The maximum load current the buck regulator can deliver is determined by the internal TPS54160 current limit, which is activated when the control voltage V_c reaches a certain fixed level V_{cmax}. When this happens, the output voltage V_{out} drops below the nominal value. The activation of the current limit is conditioned by the average load current and by the peak-to-peak inductor current ripple, which in turn depends on the input voltage V_{in}, on the switching frequency f_s, and on the inductance L of the inductor. The inductor may saturate at high current and the inductance decreases in a different way while the current increases, depending on the type of magnetic core material (*see Experiment 4*). This can make the current limit action dependent on the type of inductor.

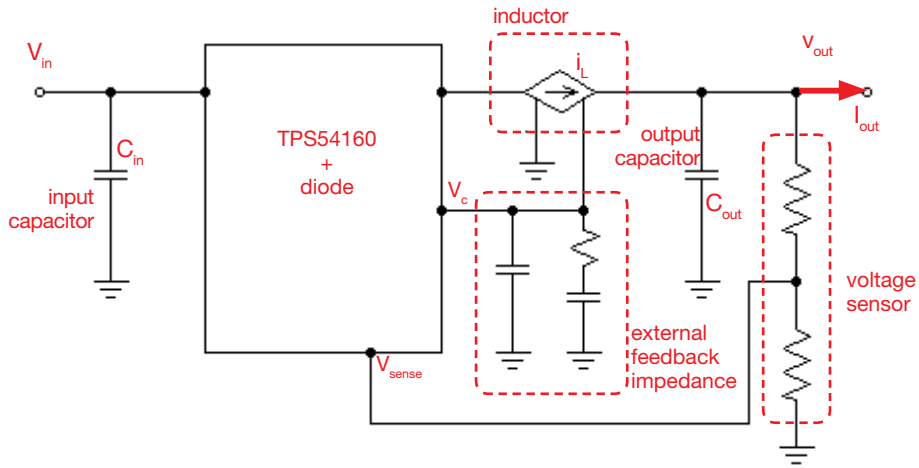

Figure 1. Simplified schematic of the TPS54160 buck regulator

Test#1. We measure the maximum current the regulator is able to deliver to the load, by increasing the load current up to the point where the currrent limit shuts down the regulator. The test is executed with different input voltage and with the two optional inductors of the TPS54160 buck regulator.

Test#2. We repeat the measurements of Test#1 with different output capacitor and switching frequency, to observe if and how the ripple on the control voltage V_c can influence the current limit action.

Theory Background

Due to their different saturation behavior, ferrite and powder inductors have a different impact on the action of the current limit, as highlighted by means of the computer simulation discussed below (*see [5] for more details about TPS54160 current limit features*).

Powder *vs* ferrite inductors behavior at low current and high current

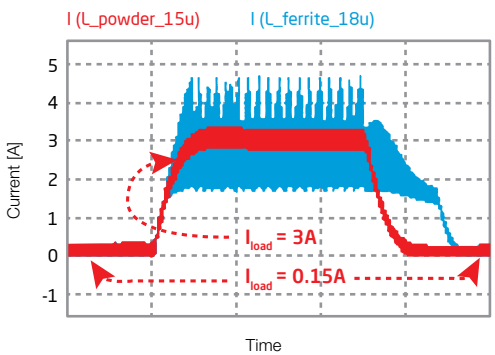

Figure 2

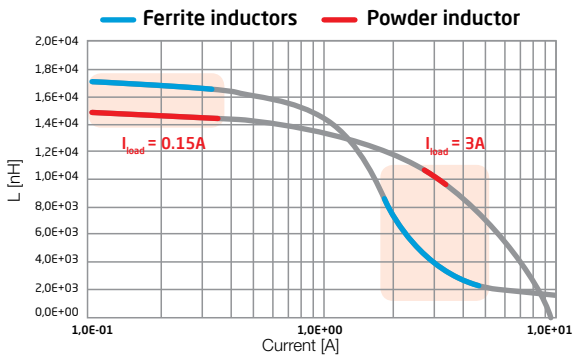

Figure 3

Figure 2 shows a simulation of the currents of the 18µH ferrite inductor L_2 and of the 15µH powder inductor L_3 when the load current passes from 0.15A to 3A and viceversa. Figure 3 shows the locus of the operating point of the two inductors on the L vs I curve during the switching period (i.e. it represents the trace of the ripple on the L vs I curve) at 0.15A and 3A load current respectively. Due to the sharp decrease of the inductance of the ferrite inductor, at 3A current the ferrite inductor peak-peak current ripple becomes much higher than with the powder inductor.

Powder vs ferrite inductors influence on current limit

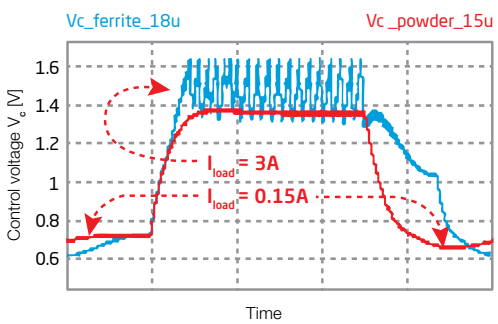

Figure 4

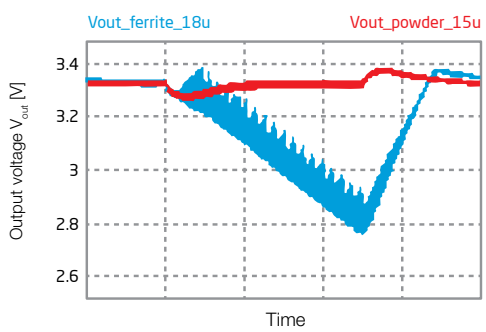

Figure 5

Figure 4 shows that the control voltage V_c may rise more for L_2 than for L_3 at high load current, due to the higher current peak-peak ripple of ferrite inductor. Therefore, the load current limit, that is the maximum current for which the converter is able to regulate the output voltage, is higher for the powder inductor vs the ferrite inductor. Figures 4 and 5 show indeed that the powder inductor allows to achieve the output voltage regulation at 3.3V with 3A load current, whereas the ferrite inductor does not allow to deliver 3A current to the load, as it determines the action of the current limit (the output voltage drops much below 3.3V and recovers when the load demands a lower current).

Good to Know

1 Ferrite inductors are not used in deep saturation. 2 A moderate saturation can be allowed in high power density supplies design, where small core size parts are needed. 3 Powder inductors are bigger and more dissipative than ferrite ones. 4 A higher voltage loop gain crossover increases the control voltage switching frequency ripple and lowers the maximum load current.

Experiment set-up: configuration

The instruments needed for this experiment are: a DC POWER SUPPLY, an OSCILLOSCOPE and a DC ELECTRONIC LOAD. Figure 6 shows the instruments connections. Follow the instructions provided in next page to set-up the connections.

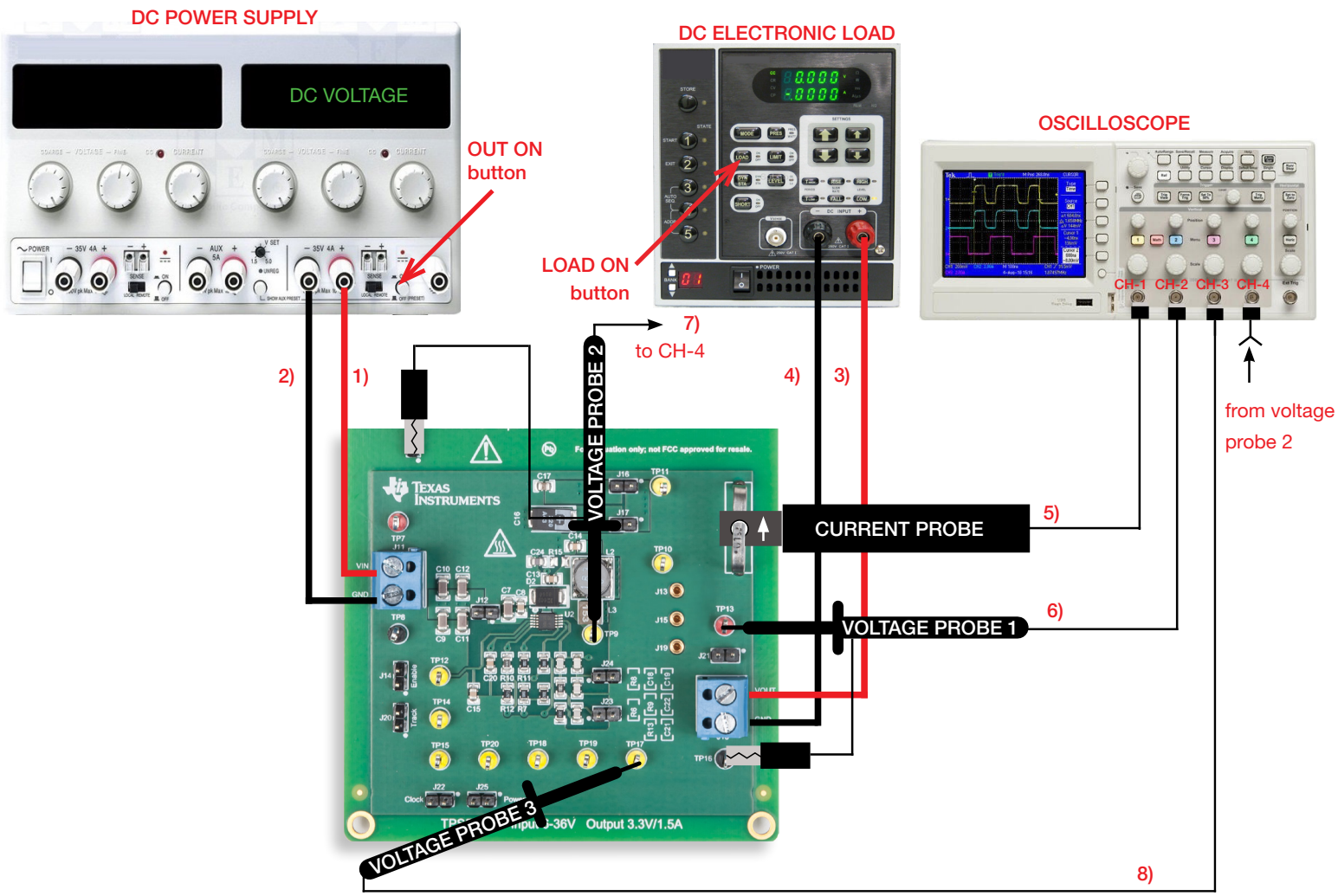

Figure 6. Experiment set-up.

Experiment set-up: instructions

With all the instruments turned off, make the following connections:

1) connect the POSITIVE (RED) OUTPUT of the DC POWER SUPPLY to the INPUT (VIN) of the J_{11} screw terminal of the TPS54160 buck regulator

2) connect the NEGATIVE (BLACK) OUTPUT of the DC POWER SUPPLY to the GROUND (GND) of the J_{11} screw terminal of the TPS54160 buck regulator

3) connect the OUTPUT (VOUT) of the J_{18} screw terminal of the TPS54160 buck regulator to the POSITIVE (RED) INPUT of the ELECTRONIC LOAD.

4) connect the NEGATIVE (BLACK) INPUT of the ELECTRONIC LOAD to the GROUND (GND) of the J_{18} screw terminal of the TPS54160 buck regulator

5) connect a current probe to channel 1 of the OSCILLOSCOPE and hang it on the sensing resistor R_5 of the TPS54160 buck regulator
[NOTE: ensure that the arrow printed on the probe clamps corresponds to the current that exits the inductor towards the output capacitor]

6) connect a voltage probe to channel 2 of the OSCILLOSCOPE, hang its positive tip to TEST PIN TP_{13} which is the output voltage of the TPS54160 buck regulator
[WARNING: **DO NOT INVERT** the positive and ground connections of the voltage probe]

7) connect a voltage probe to channel 3 of the OSCILLOSCOPE and hang it on the TEST PIN TP_9 which is the switching node voltage of the TPS54160 buck regulator

8) connect a voltage probe to channel 4 of the OSCILLOSCOPE, hang it on the TEST PIN TP_{17} which is the control voltage of the TPS54160 buck regulator, corresponding to the voltage of the TPS54160 “COMP” PIN
[WARNING: **DO NOT INVERT** the positive and ground connections of the voltage probe]

Test#1: preparation and procedure

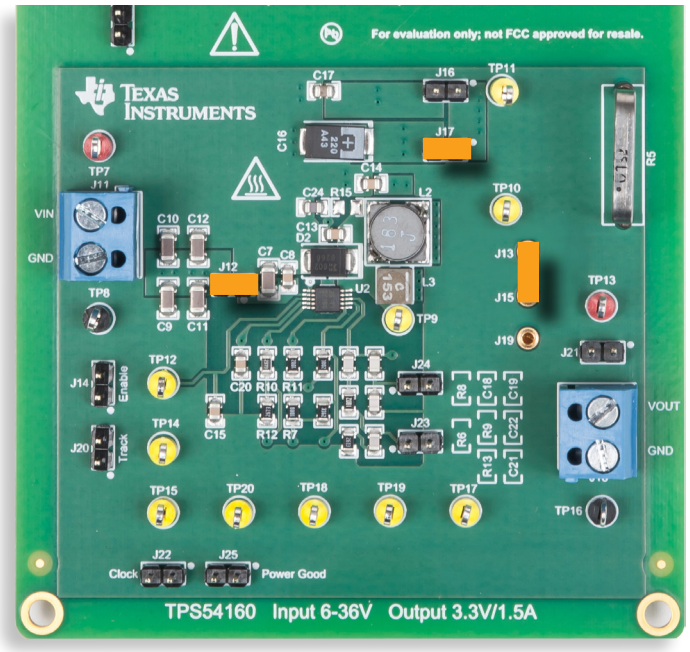

Figure 7. TPS54160 buck board: jumpers set-up for Test#1

Initial jumpers set-up (see Figure 7):

- J_{13}-J_{15} **shorted** → L_2 (18μH, ferrite) inductor connected
- J_{17} **shorted** → C_{16} (220μF) output capacitor connected
- J_{14} **open** → internal signal enabled
- J_{20} **open** → internal soft-start signal enabled
- J_{21} **open** → output caps connected to voltage sensor R_6-R_8
- J_{12} **shorted** → C_9-C_{12} (4x4.7μF) input caps connected
- J_{16} **open** → C_{17} (10μF) output cap disconnected
- J_{22} **open** → switching frequency f_s = 250kHz
- J_{23} **and** J_{24} **open** → compensation for C_{16} (220μF) output cap
- J_{25} **open** → power good signal enabled

Test Procedure:

1) turn on the OSCILLOSCOPE, set the CH-1 in DC 50Ω, set CH-2, CH-3 and CH-4 in DC 1MΩ coupling mode, select CH-4 as trigger source, and execute the "de-gauss" of the current probe to remove possible dc bias in the current probe
2) turn on the DC POWER SUPPLY (ensure that the "OUT ON" button is OFF), set the VOLTAGE at the initial value of 12V, and set the CURRENT LIMIT at 1.5A
3) turn on the ELECTRONIC LOAD (be sure that the "LOAD ON" button is OFF), set the CONSTANT CURRENT MODE, and set the current at 1A
4) turn ON the "OUT ON" button of the DC POWER SUPPLY. Under these conditions you should see the output voltage on CH-2 of the OSCILLOSCOPE as a flat horizontal line at 3.3V level. If you don't read this value, turn OFF the "OUT ON" button of the DC POWER SUPPLY and verify the previous steps
5) turn ON the "LOAD ON" button of the ELECTRONIC LOAD. Under these conditions you should see on the OSCILLOSCOPE a triangular waveshape with 1A average value on CH-1 (inductor current), a flat horizontal line at 3.3V level on CH-2 (output voltage), a flat horizontal line at a level between 500mV and 1V with a small ripple on CH-3 (control voltage), a square-wave swinging between the input voltage and a slightly negative voltage on CH-4 (switching node voltage). (If you read values much different than the one listed above, turn OFF the "LOAD ON" button of the ELECTRONIC LOAD and the "OUT ON" button of the DC POWER SUPPLY and verify the previous steps). Record the control voltage in Table 1 [**NOTE:** The average inductor current equals the load current].
6) increase slowly the current of the ELECTRONIC LOAD and detect the highest value of the current (current limit) for which output voltage is regulated at 3.3V. When the output voltage regulation is lost, turn OFF the "LOAD ON" button of the ELECTRONIC LOAD and the "OUT ON" button of the DC POWER SUPPLY and record the current limit and the corresponding control voltage in Table 1
7) repeat the step 6) for the different values of input voltage listed in Table 1.
8) turn OFF the "LOAD ON" button of the ELECTRONIC LOAD and the "OUT ON" button of the DC POWER SUPPLY, then open jumper J_{13}-J_{15} to disconnect inductor L_2 (ferrite core, 18μH) and short jumper J_{15}-J_{19} to connect inductor L_3 (powdered core, 15μH) and repeat the steps 4) to 7)
9) at the end of the measurements, turn OFF the "LOAD ON" button of the ELECTRONIC LOAD and the "OUT ON" button of the DC POWER SUPPLY, then switch off all the instruments

Test#1: measure and calculate

1) Measure the control voltage V_c at the TPS54160 "COMP" PIN at 1A load current and report the value in Table 1
2) Measure the current limit (the maximum load current for which the buck regulator is able to ensure the output voltage regulation) and report the value in Table 1
3) Measure the control voltage V_c at the current limit of point 2) and report the value in Table 1
4) Analyze the results, answer the questions and explain your observations by using the information provided in the *Theory Background* section of this Experiment and in the *Theory Background* section of *Experiment 4*.

Table 1. Control voltage and maximum output current of the TPS54160 buck regulator operating with ferrite and powder inductor, vs input voltage

(1) V_c@1A [V]	(2) I_{outmax} [A]	(3) V_c@I_{outmax} [V]	L= L_2 (J_{13}-J_{15} shorted)			L= L_3 (J_{15}-J_{19} shorted)		
V_{in} = 12V			(1)	(2)	(3)	(1)	(2)	(3)
V_{in} = 24V			(1)	(2)	(3)	(1)	(2)	(3)
V_{in} = 36V			(1)	(2)	(3)	(1)	(2)	(3)

Inductors:

L_2 (ferrite, J_{13}-J_{15} shorted):
L_{nom}=18µH σ=3.22
L_{sat}=1µH, $I_{50\%}$=1.5A
(use the partcode to visit the manufacturer web-site for more details on L_2)

L_3 (powder, J_{15}-J_{19} shorted):
L_{nom} =15µH, $L_{30\%}$ =10.5µH,
$I_{30\%}$ =2.8A
(use the partcode to visit the manufacturer web-site for more details on L_3)

Output capacitor:
J_{16} sh, J_{17} op: C_{out}=C_{17}=10µF, ESR=5mΩ
J_{16} op, J_{17} sh: C_{out}=C_{16}=220µF, ESR=25mΩ

Switching frequency:
J_{22} shorted: f_s = 500kHz
J_{22} open: f_s = 250kHz

Answer:

1. How does the control voltage at 1A load current change if line voltage increases? ☐ increases ☐ decreases ☐ it depends on inductor
2. How does the control voltage change if load current increases? ☐ increases ☐ decreases ☐ it depends on line voltage
3. Which inductor does allow the highest current limit? ☐ L_2 ☐ L_3 ☐ it depends on line voltage

Test#2: preparation and procedure

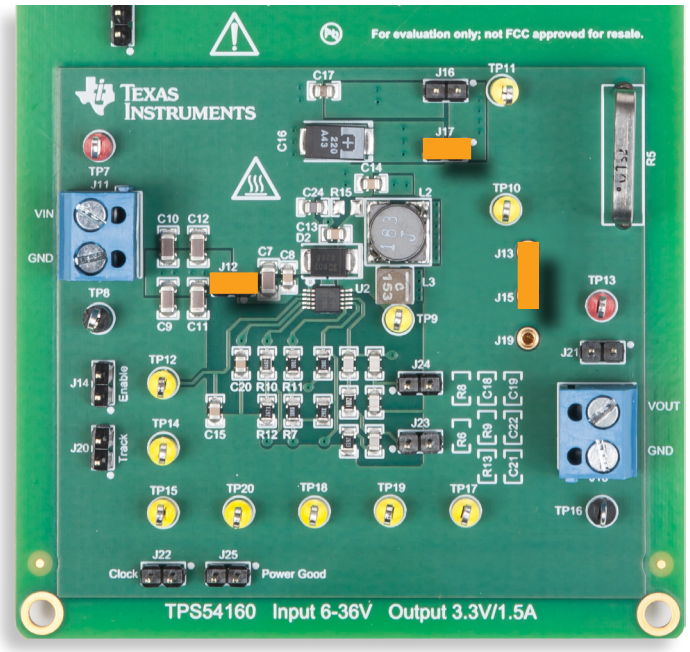

Figure 8. TPS54160 buck board: jumpers set-up for Test#2

Initial jumpers set-up (see Figure 8):

- J_{13}-J_{15} **shorted** → L_2 (18μH, ferrite) inductor connected
- J_{17} **shorted** → C_{16} (220μF) output cap connected
- J_{14} **open** → internal signal enabled
- J_{20} **open** → internal soft-start signal enabled
- J_{21} **open** → output caps connected to voltage sensor R_6-R_8
- J_{12} **shorted** → C_9-C_{12} (4x4.7μF) input caps connected
- J_{16} **open** → C_{17} (10μF) output cap disconnected
- J_{22} **open** → switching frequency f_s = 250kHz
- J_{23} **and** J_{24} **open** → compensation for C_{16} (220μF) output cap
- J_{25} **open** → power good signal enabled

Test Procedure:

1) turn on the OSCILLOSCOPE, set the CH-1 in DC 50Ω, set CH-2, CH-3 and CH-4 in DC 1MΩ coupling mode, select CH-4 as trigger source, and execute the "de-gauss" of the current probe (this removes possible dc bias in the current probe)
2) turn on the DC POWER SUPPLY (ensure that the "OUT ON" button is OFF), set the VOLTAGE at the initial value of 12V, and set the CURRENT LIMIT at 1.5A
3) turn on the ELECTRONIC LOAD (be sure that the "LOAD ON" button is OFF), set the CONSTANT CURRENT MODE, and set the current at 1A)
4) turn ON the DC POWER SUPPLY "OUT ON" button. Under these conditions you should see the output voltage on CH-2 trace of the OSCILLOSCOPE as a flat horizontal line at 3.3V level. If you don't read this value, turn OFF the "OUT ON" button of the DC POWER SUPPLY and verify the previous steps
5) turn ON the "LOAD ON" button of the ELECTRONIC LOAD. Under these conditions you should see on the OSCILLOSCOPE a triangular waveshape with 1A average value on CH-1 (inductor current), a flat horizontal line at 3.3V level on CH-2 (output voltage), a flat horizontal line at a level between 500mV and 1V with a small ripple on CH-3 (control voltage), a square-wave swinging between the input voltage and a slightly negative voltage on CH-4 (switching node voltage). (If you read values much different than the one listed above, turn OFF the "LOAD ON" button of the ELECTRONIC LOAD and the "OUT ON" button of the DC POWER SUPPLY and verify the previous steps). Record the control voltage in Table 1
6) increase slowly the current of the ELECTRONIC LOAD and detect the highest value of the current (current limit) for which output voltage is regulated at 3.3V. When the output voltage regulation is lost, turn OFF the "LOAD ON" button of the ELECTRONIC LOAD and the "OUT ON" button of the DC POWER SUPPLY and record the current limit and the corresponding control voltage in Table 1
7) repeat the step 6) for the different V_{in} and f_s combinations listed in Table 1
8) turn OFF the "LOAD ON" button of the ELECTRONIC LOAD and the "OUT ON" button of the DC POWER SUPPLY, then open jumper J_{17} to disconnect the output capacitor C_{16} (220μF), short the jumper J_{16} to connect the output capacitor C_{17} (10μF), short the jumpers J_{23} and J_{24} to set the loop compensation for the output capacitor C_{17}, and repeat the steps 4) to 7)
9) at the end of the measurements, turn OFF the "LOAD ON" button of the ELECTRONIC LOAD and the "OUT ON" button of the DC POWER SUPPLY, then switch off all the instruments

Test#2: measure and calculate

1) Measure the control voltage V_c at the TPS54160 "COMP" PIN at 1A load current and report the value in Table 2
2) Measure the current limit (the maximum load current for which the buck regulator is able to ensure the output voltage regulation) and report the value in Table 2
3) Measure the control voltage V_c at the current limit of point 2) and report the value in Table 2
4) Analyze the results, answer the questions and explain your observations by using the information provided in the *Theory Background* section of this Experiment and in the *Theory Background* sections of *Experiment 3* and *Experiment 4*.

Table 2. Control voltage and maximum output current of the TPS54160 buck regulator operating with ferrite inductor, with different input voltage, switching frequency and output capacitor set-up.

(1) V_c @1A [V]	(2) I_{outmax} [A]	(3) V_c @I_{outmax} [V]	$C_{out}=C_{16}$ (J_{16} op, J_{17} sh, J_{23} op, J_{24} op) [NOTE: set J_{23} sh and J_{24} sh to repeat this test with different voltage loop gain cross-over frequency set-up, see *Experiment 3* for details]						$C_{out}=C_{17}$ (J_{16} sh, J_{17} op, J_{23} sh, J_{24} sh)					
			f_s = 250kHz (J_{22} op)			f_s = 500kHz (J_{22} sh)			f_s = 250kHz (J_{22} op)			f_s = 500kHz (J_{22} sh)		
V_{in} = 12V			(1)	(2)	(3)	(1)	(2)	(3)	(1)	(2)	(3)	(1)	(2)	(3)
V_{in} = 36V			(1)	(2)	(3)	(1)	(2)	(3)	(1)	(2)	(3)	(1)	(2)	(3)

Inductors:

L_2 (ferrite, J_{13}-J_{15} shorted):
L_{nom}=18µH σ=3.22
L_{sat}=1µH, $I_{50\%}$=1.5A

(use the partcode to visit the manufacturer web-site for more details on L_2)

L_3 (powder, J_{15}-J_{19} shorted):
L_{nom} =15µH, $L_{30\%}$ =10.5µH,
$I_{30\%}$ =2.8A

(use the partcode to visit the manufacturer web-site for more details on L_3)

Output capacitor:
J_{16} sh, J_{17} op: C_{out}=C_{17}=10µF, ESR=5mΩ
J_{16} op, J_{17} sh: C_{out}=C_{16}=220µF, ESR=25mΩ

External feedback components:
J_{24} sh: C_{f1}=C_{19}=27pF;
J_{24} op: C_{f1}=series of C_{19} and C_{22} =4pF
J_{23} sh: C_{f2}=C_{18}=6.8nF, R_{f2}=R_9=18kΩ;
J_{23} op: C_{f2}= series of C_{16} and C_{21} =118pF
R_{f2}= series of R_9 and R_{13}=279kΩ

Answer:

1. Does a higher switching frequency increase the current limit? ☐ yes ☐ no ☐ it depends on input voltage
2. Does a bigger output capacitor increase the current limit? ☐ yes ☐ no ☐ it depends on switching frequency
3. Identify the setup of output capacitor and feedback compensation allowing the highest current limit conditions and discuss the motivations:

Discussion

In Test #1 we are interested in detecting how the TPS54160 buck regulator current limit level is correlated to the type of inductor.

The powdered iron core inductor L_3 allows the regulator to deliver a higher maximum current than the ferrite inductor L_2, although the powder inductor 15μH nominal inductance is lower than the ferrite inductor 18μH nominal inductance. This is due to the reduced saturation of the powdered iron core inductor, that makes the inductance decreasing more softly at high currents and to the effect that this has on the control voltage V_c at the "COMP" PIN of the TPS54160 Peak-Current-Control (PCC) chip.

Figures 9 and 10 show the inductor ripple current and the control voltage for the ferrite and powder inductors respectively. The plots of Figure 9 are referred to an operating condition where the load sinks 1.9A with the ferrite inductor connected. The ferrite inductor current exhibits the evident effects of saturation, that consist in the variation of the slope of the current during the switching period, leading to the typical cusp form. The regulator is not able to deliver the 1.9A load current while maintaining the output voltage regulated at 3.3V. Indeed, the control voltage has reached the internal limit of the TPS54160 determining the current limiting action, which is about 1.5V. Figure 10 is referred to an operating condition where the load sinks 2.0A with the powder inductor connected. The inductor current ripple waveform is still triangular and its peak-to-peak magnitude is smaller than in Figure 9. Moreover, the control voltage in Figure 10 is around 1V, that is much smaller than in Figure 9. As a consequence, the buck regulator with the powder inductor can deliver more than 2A without current limit action, thus ensuring the output voltage regulation ar 3.3V.

The control voltage has a higher voltage when the ferrite inductor is connected, as a consequence of the inherent operation of the PCC and of the sharper saturation of ferrite inductor. The PCC drives the turn OFF of the MOSFET when the signal provided by the internal current sensing of the TPS54160 (which is the sum of the voltage generated by the MOSFET current flowing through an internal sensing resistor and a fixed ramp) reaches the control voltage level. For a given average load current, when the ferrite inductor is connected the control signal is higher than it would be with the powder inductor connected, as the ferrite inductor causes a higher ripple due to the deeper saturation when the load current exceeds 1.2A approximately (*see Figure 3*). Therefore, the peak value of the sensing signal is higher, and this is the origin of the reduction of the current limit level observed when the ferrite inductor is connected.

The input voltage influences the current limit too, due to its impact on the magnitude of the inductor current ripple already discussend in *Experiment 2* and *Experiment 4*.

In Test #2 we are interested in detecting how the switching frequency and the output capacitor can influence the TPS54160 buck regulator current limit depending on the type of inductor.

Based on the dicussion of Test#1, it is expected that a higher switching frequency allows to increase the current limit level, as the magnitude of the peak-to-peak inductor current ripple is smaller and then the level of the control voltage for a given load current will be smaller. This can be clearly observed by comparing the experimental plots of Figures 11 and 12, where the switching frequency is 500kHz, with the experimental plots of Figures 9 and 10, where the switching frequency is 250kHz.

A larger value output capacitor may increase the current limit level, thanks to the lower output voltage ripple. In particular, the sensitivity of the current limit to the size of the output capacitor depends on the voltage loop gain cross-over frequency. A high cross-over frequency is achieved with an error amplifier characterized by a very wide bandwidth. In this case, in steady-state operation, the output voltage ripple at the switching frequency is amplified by the error amplifier and injected into the control voltage V_c at the TPS54160 "COMP" PIN, thus becoming influential on the current limit. With a low cross-over frequency, the sensitivity of current limit with respect to the output capacitor is negligible, as the error amplifier damps the output voltage ripple. The sensitivity can be higher during load transients, as the combination of small output capacitor and low cross-over frequency can determine overshoots in the control voltage that facilitate the current limit action.

Experimental plots

The experimental plots samples collected in this page show the inductor current and output voltage waveforms of the TPS54160 buck regulator in different operating conditions.

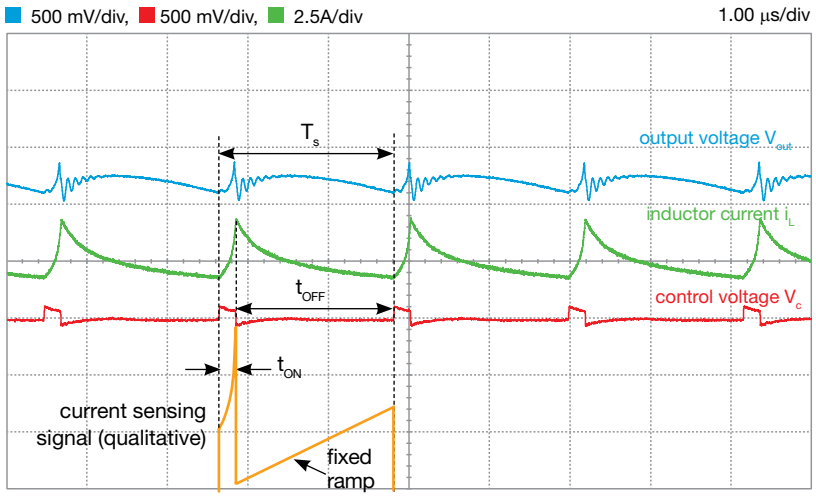

Figure 9. V_{in}=36V, I_{out}=1.9A, f_s=250kHz, L = L_2 = 18µH (ferrite inductor), C_{out}=C_{17}=10µF (ceramic capacitor)

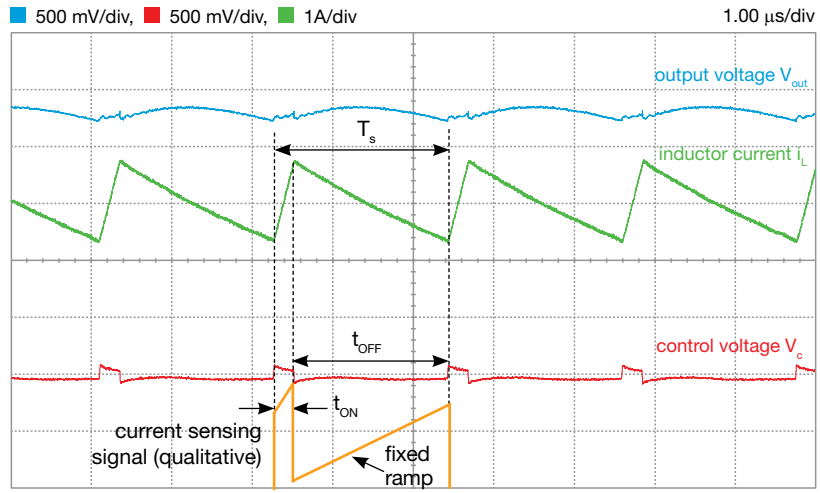

Figure 10. V_{in}=36V, I_{out}=2.0A, f_s=250kHz, L = L_3 = 15µH (powder inductor), C_{out}=C_{17}=10µF (ceramic capacitor)

The plots of Figures 9 and 10 show the impact of the inductor current ripple on the value of the control voltage V_c at the TPS54160 “COMP” PIN (Test Pin TP_{17}). The orange lines in Figures 9 and 10 show the internal current sensing signal or the TPS54160 as it should appear if it would be possible to measure it. During the ON time t_{ON} the current sensing signal is the sum of the inductor current, scaled by the current sensing gain, and the fixed ramp. During the OFF time t_{OFF} the signal contains only the fixed ramp. The effect of the inductor saturation in Figure 9 is visible during the ON time, where you can observe the larger vertical swing determined by the ferrite inductor saturation. This is the origin of the rise of the control signal and of the current limit action.

Experimental plots

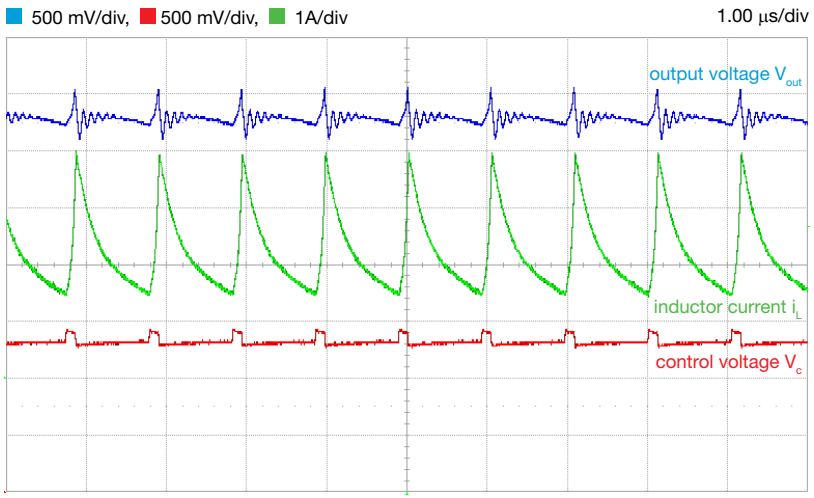

Figure 11. V_{in}=36V, I_{out}=2.2A, f_s=500kHz, L = L_2 = 18µH (ferrite inductor), C_{out}=C_{16}=220µF (electrolytic capacitor)

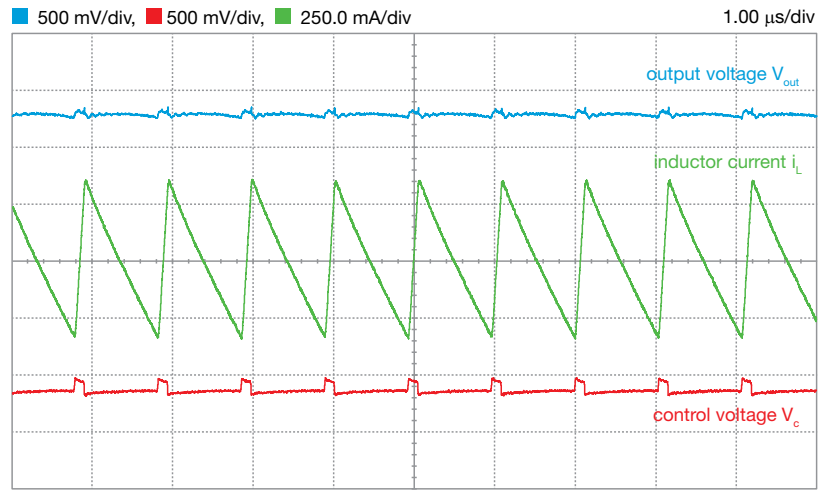

Figure 12. V_{in}=36V, I_{out}=2.0A, f_s=500kHz, L = L_3 = 15µH (powder inductor), C_{out}=C_{16}=220µF (electrolytic capacitor)

The plots of Figures 11 and 12, compared to the plots of Figures 9 and 10, show the impact of the switching frequency on the average value of the control voltage V_c at the TPS54160 “COMP” PIN (Test Pin TP_{17}).

Experiment 6

The goal of this experiment is to analyze the switching frequency f_s, the DC accuracy and the line noise rejection capabilities of the hysteretic buck regulator. The LM3475 buck regulator is used for this experiment.

Case Study

The goal of this experiment is to analyze how the switching frequency f_s, the DC accuracy and the line noise rejection of the hysteretic buck regulator depend on line voltage, the load current, the characteristics of the output capacitor and the impact of speed-up capacitor.

Figure 1 shows the simplified circuit schematic of the LM3475 hysteretic buck regulator. Hysteretic control senses the output voltage by means of the voltage sensor R_{f1}-R_{f2} and compares the feedback signal V_{FB} with a reference voltage V_{ref} by means of a hysteretic comparator. The feedback voltage V_{FB} swings between an upper and a lower hysteresis threshold. When V_{FB} equals the lower threshold, the external P-channel MOSFET Q_1 is turned ON, whereas, when V_{FB} equals the upper threshold, the external P-channel MOSFET Q_1 is turned OFF. Thus, the operating switching frequency f_s of the hysteretic buck regulator is determined by the inductance **L** of the inductor, the resistance **ESR** of output capacitor, the input voltage V_{in}, the hysteresis band voltage V_{HYST}, the reference voltage V_{ref} and the speed-up capacitor C_{FF}. Delay time of hysteretic comparator and parasitic inductance of the output capacitor influence the DC accuracy and the switching frequency of the hysteretic buck regulator.

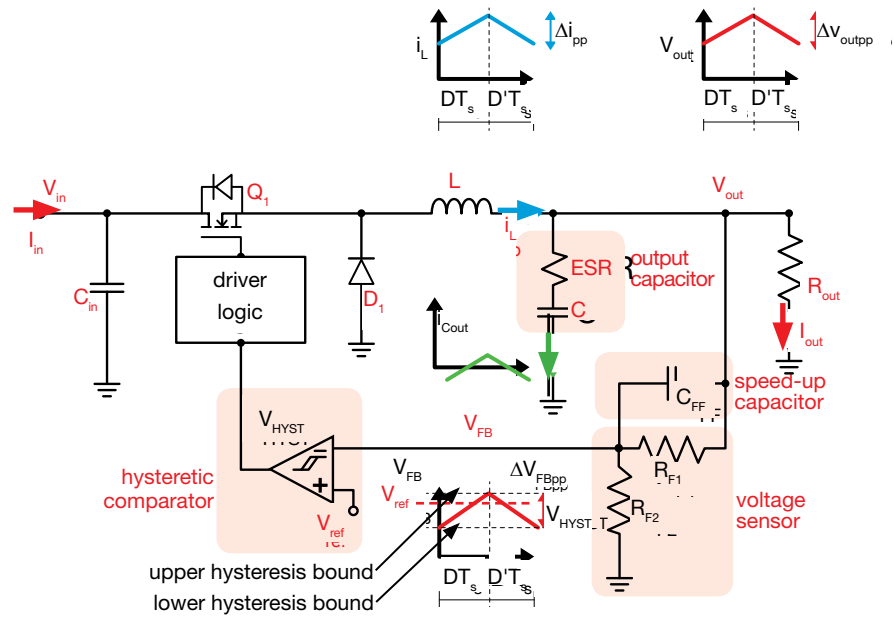

Figure 1. Simplified circuit schematic of LM3475 buck regulator

Test#1. We analyze the steady-state operation of the hysteretic regulator, with different output capacitor setup and different input voltage and load current. We measure the average output voltage V_{out}, the peak-to-peak output voltage ripple ΔV_{outpp}, the peak-to-peak inductor current ripple Δi_{pp} and the switching frequency f_s. The goal is to highlight that the input voltage heavily influences the switching frequency, while the tolerances and uncertainties of the output capacitor ESR can lead to values of the switching frequency different with respect to the expected ones.

Test#2. We analyze the line transient and load transient response of the hysteretic regulator, with different output capacitor setup, with and without the speed-up capacitor, and with different input voltage and load current. We measure the magnitude of output voltage surges ΔV_{out} during line trasients and load transients. The goal is to highlight that the hysteretic regulator has excellent line transient response, whereas the performance in the load transient response is conditioned by the ESR of the output capacitor.

Theory Background

The simplified formulae for hysteretic buck converter analysis are summarized in this section for Continuous Conduction Mode operation. (*See [6] for more details about LM3475 operation and features*)

Steady State Operation

In the ideal hysteretic buck regulator, the nominal average output voltage V_{outnom} is set by selecting sensing resistors R_{f1} and R_{f2} so that:

(1) $R_{f2}/(R_{f1}+R_{f2}) = H = V_{ref}/V_{outnom}$

The switching frequency and output voltage ripple are:

(2) $f_s = (1-D)V_{ref}ESR/(V_{HYST}L)$

(3) $\Delta V_{outpp} = V_{HYST}V_{outnom}/V_{ref}$

The real output voltage average value and ripple and switching frequency are:

(4) $$V_{out} \cong V_{outnom} + \frac{(V_i - 2V_{outnom})t_d ESR}{2L}$$

(5) (*) $$f_s \cong \frac{D'ESR}{\frac{V_{HYST}L}{V_{ref}} + \frac{V_{in}t_d ESR}{V_{outnom}}}$$

(6) $$\Delta V_{outpp} \cong \frac{V_{HYST}V_{outnom}}{V_{ref}} + \frac{V_i t_d ESR}{L}$$

where t_d is the total delay(**) affecting the hysteretic loop.

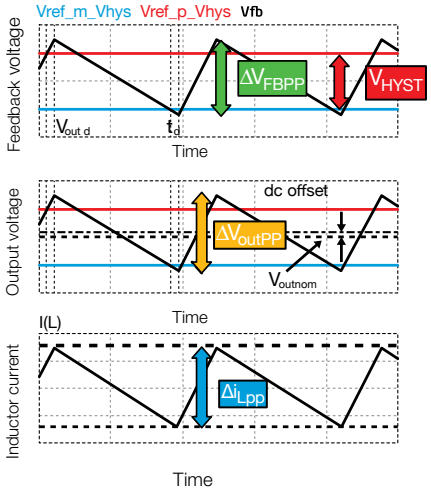

Figure 2

(*) valid if C>max{D,D'}/(2f_sESR), without C_{FF}; D' = 1-D = 1 - V_{out}/V_{in}

(**) the total delay of the hysteretic loop t_d is the sum of the hysteretic comparator delay and of the P-FET delay (see [6] for more details)

Transient Operation

The magnitude ΔV_{out} of the step-wise load transient output voltage surges observed in Figure 3 in correspondence of load step-up $+\Delta I_{out}$ and load step-down $-\Delta I_{out}$ is given by the formula (7):

(7) $\Delta V_{out} = ESR\ \Delta I_{out}$

which is valid if the capacitance C of the output capacitor fulfills the condition:

$$C > \frac{1}{f_s R_{LT} r}\left[\frac{r^2(1+D')}{12} + D'(1+r)\right]$$

where

(8) $R_{LT} = \Delta V_{outmax} / \Delta I_{out}$

(9) $r = \Delta i_{pp} / \Delta I_{out}$

and ΔV_{outmax} is the maximum magnitude allowed for output voltage surges in the application (see [4] for more details).

In Figure 3 there are no output voltage surges in correspondence of input voltage step-up and step-down.

The hysteretic buck regulator ensures high immunity against line transient, thanks to the feed-forward effect of the ESR of the output capacitor.

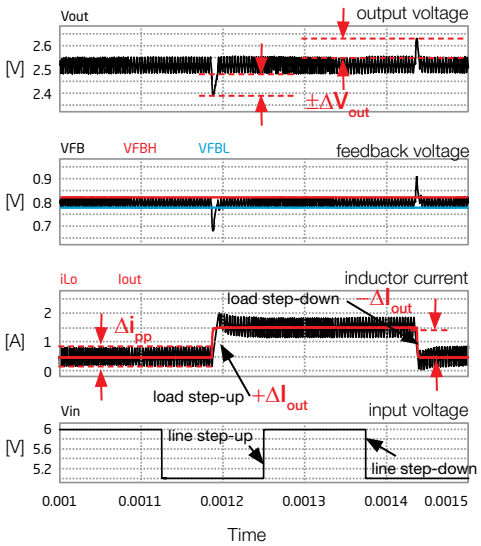

Figure 3

Good to Know

1. Given the desired switching frequency f_s, the capacitance C_{FF} needed to achieve it is given by the simplified formula:

$$C_{FF} \cong \frac{1}{R_{F2}}\left[\frac{V_{HYST}L_o}{D'V_i ESR} - \frac{HD}{f_s}\right]$$ that is valid for $f_s > f_{smin} = \frac{V_{ref}D'ESR}{V_{HYST}L_o}$, where f_{smin} is the switching frequency with C_{FF}=0 and t_d=0.

2. Given the input voltage V_{in}, the output voltage V_{out}, the inductance L and the MOSFET ON time t_{ON}, the peak-to-peak inductor current ripple is given by: $\Delta i_{pp} = (V_{in}-V_{out})t_{ON}/L$

Test#1: Experiment set-up configuration

The instruments needed for this experiment are: a DC POWER SUPPLY, an OSCILLOSCOPE and a DC ELECTRONIC LOAD. Figure 4 shows the instruments connections. Follow the instructions provided in next page to set-up the connections.

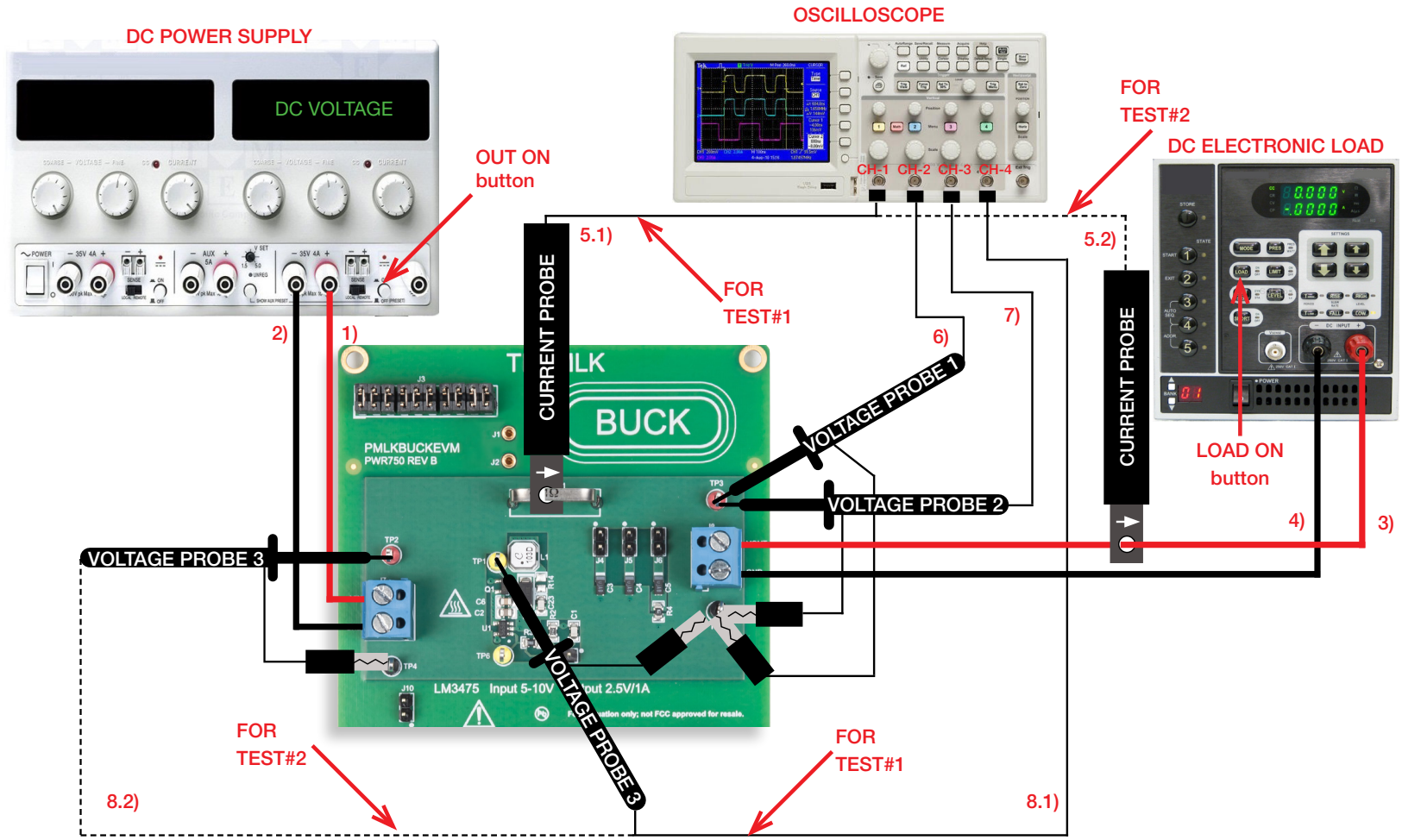

Figure 4. Experiment set-up.

Experiment set-up instructions

With all the instruments turned off, make the following connections:

1) connect the POSITIVE (RED) OUTPUT of the DC POWER SUPPLY to the INPUT (VIN) of the screw terminal J_7 of LM3475 buck regulator

2) connect the NEGATIVE (BLACK) OUTPUT of the DC POWER SUPPLY to the GROUND (GND) INPUT of the screw terminal J_7 of LM3475 buck regulator

3) connect the OUTPUT (VOUT) of the screw terminal J_8 of the LM3475 buck regulator to the POSITIVE (RED) INPUT of the ELECTRONIC LOAD

4) connect the GROUND (GND) of the screw terminal J_8 of the LM3475 buck regulator to the NEGATIVE (BLACK) INPUT of the ELECTRONIC LOAD

5.1) FOR TEST#1: connect a current probe to channel 1 of the OSCILLOSCOPE and hang it on the sensing resistor R_1 of the LM3475 buck regulator, ensuring that the arrow printed on the probe clamps corresponds to the current that enters the inductor
[NOTE: ensure that the arrow must point rightside when looking at the LM3475 buck board frontally]

5.2) FOR TEST#2: connect a current probe to channel 1 of the OSCILLOSCOPE and hang it on the cable connecting the OUTPUT (VOUT) of the screw terminal J_8 of the LM3475 buck regulator to the POSITIVE (RED) INPUT of the ELECTRONIC LOAD
[NOTE: ensure that the arrow printed on the probe clamps corresponds to the current that enters the ELECTRONIC LOAD]

6) connect a voltage probe to channel 2 of the OSCILLOSCOPE and hang it on the TEST PIN TP_3, which is the output voltage of LM3475 buck regulator
[WARNING: **DO NOT INVERT** the positive and ground connections of the voltage probe]

7) connect a voltage probe to channel 3 of the OSCILLOSCOPE and hang it on the TEST PIN TP_3 too, like for connection 6
[WARNING: **DO NOT INVERT** the positive and ground connections of the voltage probe]

8.1) FOR TEST#1: connect a voltage probe to channel 4 of the OSCILLOSCOPE and hang it on the TEST PIN TP_1, which is the switching node voltage of the LM3475 buck regulator.
[WARNING: **DO NOT INVERT the positive and ground connections of the voltage probe**]

8.2) FOR TEST#2: connect a voltage probe to channel 4 of the OSCILLOSCOPE and hang it on the TEST PIN TP_2, which is the input voltage of the LM3475 buck regulator.
[WARNING: **DO NOT INVERT the positive and ground connections of the voltage probe**]

Test#1: preparation and procedure

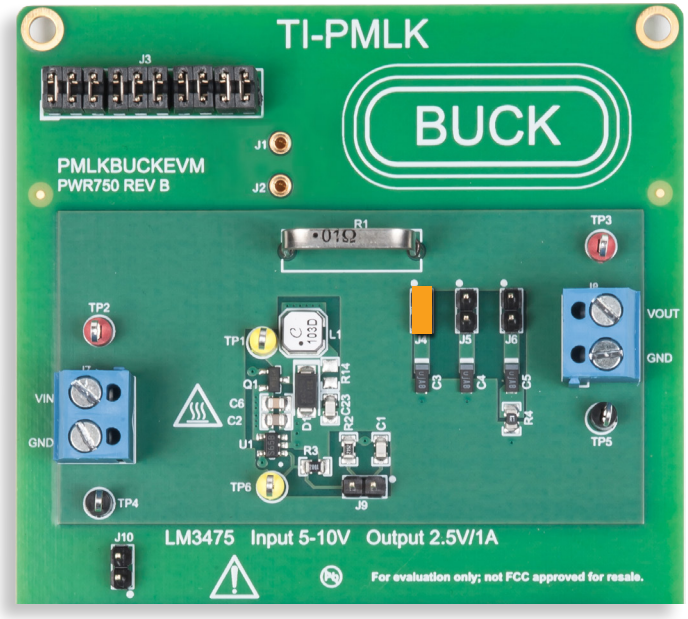

Figure 5. LM3475 buck board: jumpers set-up for Test#1

Initial jumpers set-up (see Figure 5):

- **J_4 shorted** → C_3 (100μF, 100mΩ) output capacitor connected
- **J_5 open** → C_4 (100μF, 200mΩ) output capacitor disconnected
- **J_6 open** → series of C_5 (100μF, 100mΩ) output capacitor and R_4 (100mΩ) resistor disconnected
- **J_9 open** → C_1 (100pF) speed-up capacitor disconnected

[**NOTE:** This setup corresponds to case (a) of Table 1]

Test Procedure:

1) turn on the OSCILLOSCOPE, set CH-1 in DC 50Ω, CH-3 and CH-4 in DC 1MΩ, set CH-2 in AC 1MΩ coupling mode, select CH-4 as trigger source, and execute the "de-gauss" of the current probe to remove possible DC bias in the current probe
2) turn on the DC POWER SUPPLY (be sure that the "OUT ON" button is OFF), set the voltage of the DC POWER SUPPLY at the initial value of 5V, and set the DC POWER SUPPLY CURRENT LIMIT at 1A
3) turn on the ELECTRONIC LOAD (be sure that the "LOAD ON" button is OFF), set CONSTANT CURRENT MODE with the current at 0.5A.
4) turn ON the "OUT ON" button of the DC POWER SUPPLY. Under these conditions you will see the inductor current on CH-1 trace of the OSCILLOSCOPE as a triangular waveshape with 0.5A average value, the DC component of the output voltage on CH-2 trace as a flat horizontal line at 2.5V level, the AC component of the output voltage on CH-3 trace as a waveform swinging around average 0V level, the switching node voltage on CH-4 trace as a square-wave swinging between the input voltage value and a slightly negative value equal to the forward voltage drop of the rectifier. (If the waveforms do not look as described above, turn OFF the "OUT ON" button of the DC POWER SUPPLY and verify the previous steps)
5) turn ON the "LOAD ON" button of the ELECTRONIC LOAD. Under these conditions you should see on the OSCILLOSCOPE a triangular waveshape with 0.5A average value on CH-1 (inductor current), a flat horizontal line at 2.5V level on CH-2 (DC output voltage), a square-wave on CH-4 (switching node voltage) swinging between the input voltage value and a slightly negative value equal to the forward voltage drop of the rectifier, and the trace on CH-3 (AC output voltage) as a waveform swinging around average 0V level. (If you see waveforms and values not fitting the above description, turn OFF the "LOAD ON" button of the ELECTRONIC LOAD and the "OUT ON" button of the DC POWER SUPPLY and verify the previous steps)
6) read the average and peak-to-peak output voltage ripple on CH-2 and CH-3 respectively, the peak-to-peak inductor current ripple on CH-1 and measure the switching frequency using the CH-4 trace with cursor or measurement functions of the OSCILLOSCOPE, record the values in Table 1, and repeat this step for all the values of the load current and input voltage listed in Table 1 (you do not need to turn OFF the DC POWER SUPPLY "OUT ON" button and the ELECTRONIC LOAD "LOAD ON" button while changing the input voltage and the load current)
7) turn OFF the "LOAD ON" button of the ELECTRONIC LOAD and the "OUT ON" button of the DC POWER SUPPLY, then open jumper J_4 to disconnect C_3 (100μF, 100mΩ) output capacitor, short jumper J_5 to connect C_4 (100μF, 200mΩ) output capacitor and repeat the steps 6)
   [**NOTE:** This setup corresponds to case (b) of Table 1]
8) repeat the shut-down step 7) to setup case (c) of Table 1, and repeat step 6)
9) at the end of the measurements, turn OFF the "LOAD ON" button of the ELECTRONIC LOAD and the "OUT ON" button of the DC POWER SUPPLY, then switch off all the instruments

Test#1: measure and calculate

1) Measure the average output voltage V_{out}, evaluate the percent output voltage DC accuracy by means of the formula $acc_{DC}\% = (V_{out}-V_{outnom})/V_{outnom} \times 100$, where $V_{outnom} = 2.5V$ and collect the result in Table 1.
2) Measure the peak-to-peak output voltage ripple Δv_{outpp}, the peak-to-peak inductor current ripple Δi_{pp}, the switching frequency f_s, and record the results in Table 1.
3) Calculate the expected values of peak-to-peak output voltage ripple Δv_{outpp}, peak-to-peak inductor current ripple Δi_{pp}, and switching frequency f_s by means of the formuale provided in the *Theory Background* section and of *Parameters* provided hereafter.
4) Analyze the results, answer the questions and explain your observations by using the formulae and the information provided in the *Theory Background* section.

Table 1. Output voltage DC accuracy and peak-to-peak ripple, inductor current ripple and switching frequency of LM3475 hysteretic buck regulator in steady-state operation, with different input voltage, load current and output capacitor set-up.

(1) acc_{DC}% [%]	(2) ΔV_{outpp} [mV]	(3) Δi_{pp} [mA]	(4) f_s [kHz]	case (a): J_4 sh, J_5 op, J_6 op, J_9 op				case (b): J_4 op, J_5 sh, J_6 op, J_9 op				case (c): J_4 op, J_5 op, J_6 sh, J_9 op			
I_{out} = 0.5A, V_{in}=5V				(1)	(2)	(3)	(4)	(1)	(2)	(3)	(4)	(1)	(2)	(3)	(4)
I_{out} =1.0A, V_{in}=5V				(1)	(2)	(3)	(4)	(1)	(2)	(3)	(4)	(1)	(2)	(3)	(4)
I_{out} = 0.5A, V_{in}=10V				(1)	(2)	(3)	(4)	(1)	(2)	(3)	(4)	(1)	(2)	(3)	(4)
I_{out} = 1.0A, V_{in}=10V				(1)	(2)	(3)	(4)	(1)	(2)	(3)	(4)	(1)	(2)	(3)	(4)

Output Capacitor:

J_4 sh, J_5 op, J_6 op: C = C_3 (100µF, ESR=0.1Ω nominal)

J_4 op, J_5 sh, J_6 op: C = C_4(100µF, ESR=0.2Ω nominal)

J_4 op, J_5 op, J_6 sh: C = C_5(100µF, ESR=0.1Ω nominal) + R_4 0.1Ω series

Speed-up capacitor

J_9 sh: C_{FF}=C_1=100pF

Inductor:

L = L_1 = 10µH

LM3475 hysteretic controller:

V_{ref} = 0.8V

V_{HYST} = 21mV

(see [6] for more details on V_{HYST} value)

Delay times:

90ns for LM3475

40ns to 80ns for P-FET

Answer:

1. Does the line voltage influence the output voltage ripple and DC accuracy? ☐ yes ☐ no it depends on: ☐ I_{out} ☐ output capacitor

2. Is the output voltage ripple influenced by the load current? ☐ yes ☐ no it depends on: ☐ V_{in} ☐ output capacitor

3. Describe how the switching frequency depends on V_{in}, I_{out} and on the output capacitor parameters: _____

Test#2: preparation and procedure

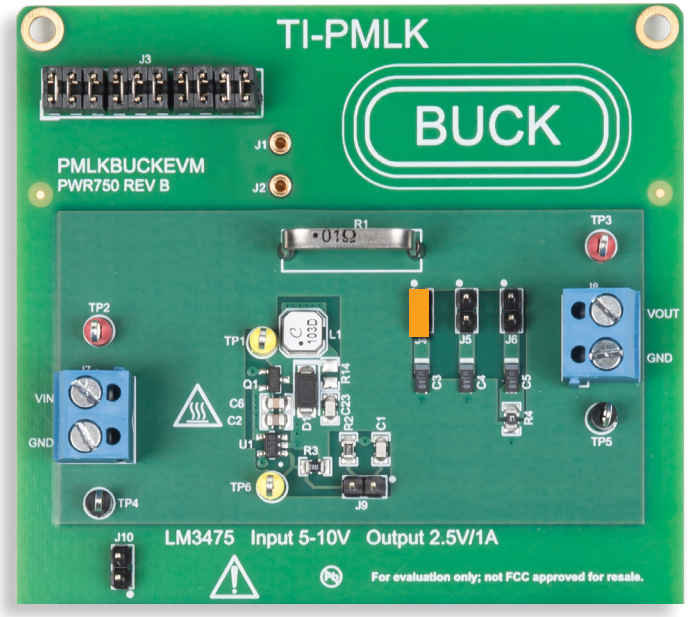

Figure 6. LM3475 buck board: jumpers set-up for Test#2

Initial jumpers set-up (see Figure 6):

- J_4 **shorted** → C_3 (100μF, 100mΩ) output capacitor connected
- J_5 **open** → C_4 (100μF, 200mΩ) output capacitor disconnected
- J_6 **open** → series of C_5 (100μF,100mΩ) output capacitor and R_4 (100mΩ) resistor disconnected
- J_9 **open** → C_1 (100pF) speed-up capacitor disconnected

[**NOTE:** This setup corresponds to case (a) of Table 2]

Test Procedure [see Experiment setup instructions 5.2) and 8.2) for test #2]:

1) turn on the OSCILLOSCOPE, set CH-1 in DC 50Ω, set CH-3 and CH-4 in DC 1MΩ, set CH-2 in AC 1MΩ coupling mode, select CH-1 as trigger source, and execute the "de-gauss" of the current probe to remove possible dc bias in the current probe
2) turn on the DC POWER SUPPLY (be sure that the "OUT ON" button is OFF), set the VOLTAGE at 5V, and the CURRENT LIMIT at 1A
3) turn on the ELECTRONIC LOAD (be sure that the "LOAD ON" button is OFF), set the DYNAMIC CURRENT MODE, the low current at 0.5A, the high current at 1.5A, the low current and the high current times at 200μs, with maximum slew-rate
4) turn ON the "OUT ON" button of the DC POWER SUPPLY. Under these conditions you should see on the OSCILLOSCOPE the traces of CH-2 (DC output voltage) and CH-4 (input voltage) as a flat lines at 2.5V and 5V levels respectively (otherwise, turn OFF the "OUT ON" button of the DC POWER SUPPLY and verify previous steps)
5) turn ON the "LOAD ON" button of the ELECTRONIC LOAD. Under these conditions you should see on the OSCILLOSCOPE a square-wave swinging between 0.5A and 1.5A on CH-1 (load current), an almost flat line at 2.5V level on CH-2 (DC output voltage), and the trace on CH-3 (AC output voltage) as a flat line around average 0V level with small transient surges (otherwise, turn OFF the "LOAD ON" button of the ELECTRONIC LOAD and the "OUT ON" button of the DC POWER SUPPLY and verify previous steps)
6) read the magnitude of the output voltage surges with cursor or measurement functions of the OSCILLOSCOPE, record the values in Table 1, and repeat this step with the input voltage equal to 10V (you do not need to turn OFF the "OUT ON" button of the DC POWER SUPPLY and the "LOAD ON" button of the ELECTRONIC LOAD while changing the input voltage and the load current)
7) turn OFF the "LOAD ON" button of the ELECTRONIC LOAD and the "OUT ON" button of the DC POWER SUPPLY, set the combination (b) of jumpers J_4, J_5, J_6 and J_9 indicated in Table 1 and repeat the step 6)
8) repeat steps 7) to setup jumpers combination of case (c), then repeat step 6)
9) turn OFF the "LOAD ON" button of the ELECTRONIC LOAD and the "OUT ON" button of the DC POWER SUPPLY, set the DC POWER SUPPLY in DYNAMIC MODE, with a 250Hz, 50% duty-cycle square-wave voltage swinging between 5V and 10V, set the ELECTRONIC LOAD in CONSTANT CURRENT MODE at 1.5A, and turn ON the "OUT ON" and "LOAD ON" buttons. Under these conditions you should see on the OSCILLOSCOPE a square-wave swinging between 5V and 10V on CH-4 (input voltage), a flat line at 2.5V level on CH-2 (DC output voltage), and a waveform swinging around average 0V level on CH-3 (AC output voltage) (otherwise, turn OFF the "LOAD ON" button of the ELECTRONIC LOAD and the "OUT ON" button of the DC POWER SUPPLY and verify the previous steps)
10) read the magnitude of the output voltage surges for the jumpers combinations (a), (b) and (c) of Table 2, and repeat the test with the load current equal to 0.5A (put "OUT ON" and "LOAD ON" buttons OFF whenever changing the jumpers setup)
11) at the end of the measurements, turn OFF the "LOAD ON" button of the ELECTRONIC LOAD and the "OUT ON" button of the DC POWER SUPPLY, then switch off all the instruments

Test#2: measure and calculate

1) Measure the average output voltage surge magnitude ΔV_{out} and collect the results in Table 2.
2) Analyze the results, answer the questions and explain your observations by using the formulae and the information provided in the *Theory Background* section.

Table 2. Load transient output votltage surges of LM3475 hysteretic buck regulator, with different output capacitor and speed-up capacitor setup.

ΔV_{out} [mV]				case (a): J_4 sh, J_5 op, J_6 op, J_9 op		case (b): J_4 sh, J_5 op, J_6 op, J_9 sh		case (c): J_4 op, J_5 op, J_6 sh, J_9 op	
(1)	V_{in}=5V 0.25A→0.75A	(2)	V_{in}=10V 0.25A→0.75A	(1)	(2)	(1)	(2)	(1)	(2)
(1)	V_{in}=5V 0.75A→0.25A	(2)	V_{in}=10V 0.75A→0.25A	(1)	(2)	(1)	(2)	(1)	(2)
(1)	I_{out}=0.75A 5V→10V	(2)	I_{out}=0.25A 5V→10V	(1)	(2)	(1)	(2)	(1)	(2)
(1)	I_{out}=0.75A 10V→5V	(2)	I_{out}=0.25A 10V→5V	(1)	(2)	(1)	(2)	(1)	(2)

Output Capacitor:

J_4 sh, J_5 op, J_6 op: C = C_3 (100µF, ESR=0.1Ω nominal)

J_4 op, J_5 sh, J_6 op: C = C_4(100µF, ESR=0.2Ω nominal)

J_4 op, J_5 op, J_6 sh: C = C_5(100µF, ESR=0.1Ω nominal) + R_4 0.1Ω series

Speed-up capacitor

J_9 sh: C_{FF}=C_1=100pF

Inductor:

L = L_1 = 10µH

LM3475 hysteretic controller:

V_{ref} = 0.8V

V_{HYST} = 21mV

(see [6] for more details on V_{HYST} value)

Delay times:

90ns for LM3475

40ns to 80ns for P-FET

Answer:

1. Is the magnitude of output voltage surges bigger during line-transient or load transient? ☐ line-transient ☐ load-transient

2. How does the input voltage influence the magnitude of load-transient surges? _____

3. Which factor is more influential on the magnitude of output voltage surges during load transients? ☐ V_{in} ☐ ESR ☐ C_{FF}

motivation: _____

Discussion

In Test #1 we are interested in analyzing the correlations among the output voltage DC accuracy, the output voltage peak-to-peak ripple, the switching frequency, the line voltage, the load current and the output capacitor characteristics of the LM3475 hysteretic buck regulator.

Hereafter, we focus the discussion on the switching frequency, which is one of the main issues of interest in the hysteretic buck regulator operation. You can extend your own insight into the output voltage DC accuracy and ripple issues, based on the concepts and inferences discussed herein and on the formulae provided in the *Theory Background* section.
The formulae (2) and (5) provided in the *Theory Background* section show that the input voltage is a major factor influencing the switching frequency. In fact, a higher input voltage involves a lower duty-cycle D and then a higher value of D'=1-D. Beyond the formal evidence provided by the formulae (2) and (5), the physical reason why the frequency increases when the input voltage increases is that, in the hysteretic buck regulator, the OFF time of the MOSFET is fixed by the output voltage and by the inductance of the inductor, whereas the ON time decreases when the input voltage increases. This is well visible in Figures 7 and 8, where the OFF time is about 3ms in both cases whereas the ON time decreases from about 4ms for V_{in}=5V (Figure 7) to about 1ms for V_{in}=10V (Figure 8).
The ESR of the output capacitor is a major factor influencing the switching frequency. The measured switching frequency can deviate from the value predicted by the formulae (2) and (5). The reasons are manifold. First, the nominal ESR of capacitors C_3, C_4 and C_5 in the LM3475 board is 100mΩ or 200mΩ, but these are the values measured by the manufacturer at a certain frequency (*see the datasheet of components and website of manufacturer for more details about the ESR of capacitors*), whereas the real ESR changes with the temperature and with the frequency. But the formulae (2) and (5) say that in the hysteretic regulator the frequency depends on the ESR. The hysteretic regulator settles therefore at an equilibrium frequency that is as much different than the nominal frequency provided by the formulae (2) and (5) as the real ESR at that nominal frequency is different from the nominal ESR. The board mounts the output capacitor C_4 with C=100μF and ESR=200mΩ and the output capacitor C_5 with C=100μF and ESR=100mΩ with an additional 100mΩ resistor in series. In theory, these two setup should provide the same switching frequency, but they do not, as the real ESR of C_4 is not equal to 200mΩ and the real ESR of C_5 is not equal to 100mΩ. Moreover, the delay times of LM3475 and external P-MOS and the LM3475 hysteretic gap voltage V_{HYST} have their own uncertainty, that contributes to the deviation of the switching frequency from the value predicted by the formula (5).
The load current has a little influence on the switching frequency of the hysteretic buck regulator. Although there is no explicit influence of the load current in the formulae (2) and (5), when the load current increases the buck converter losses increase, and this involves an increase of the duty-cycle D, wich influences the switching frequency. Moreover, when the load current is high, the load resistance may influence the equivalent resistance wherein the inductor current ripple flows, as the load resistance is in parallel to the output capacitor ESR. This may cause a decrease of the switching frequency of the hysteretic buck regulator.

In Test#2 we are interested in analyzing the correlations between the line voltage, the load current, the output capacitor and the magnitude of output voltage surges during load-trasients and line-transients.

The magnitude of line-transients surges is expected to be negligible, due to the fast feedforward action inherent to hysteretic control. In fact, as soon as a line voltage change occurs, the slope of the inductor current suddenly changes. As a consequence, the slope of the voltage ripple on the ESR of the output capacitor changes rapidly, and the same happens to the feedback signal, which rises more rapidly if the input voltage increases and more slowly if the input voltage decreases. The ON time of the MOSFET is therefore immediately adjusted while the line transient occurs and this makes the output voltage of the hysteretic buck regulator well immunized against line voltage disturbances. Figure 10 shows the good line noise rejection of the LM3475.
Load-transient output voltage surges depend on the ESR of the output capacitor and can be well visible if the current slew-rate of the load current is high. The high ESR required to make the hysteretic regulator working at high frequency and with good immunity against line noise has a counterproductive effect on load transients, as shown in formula (7). In Figure 10 the load transient output voltage surges are not visible as the current slew-rate is in the range of 0.1A/μs.

Experimental plots

The experimental plot samples collected in this page show the inductor current and output voltage waveforms of the LM3475 buck regulator in different operating conditions.

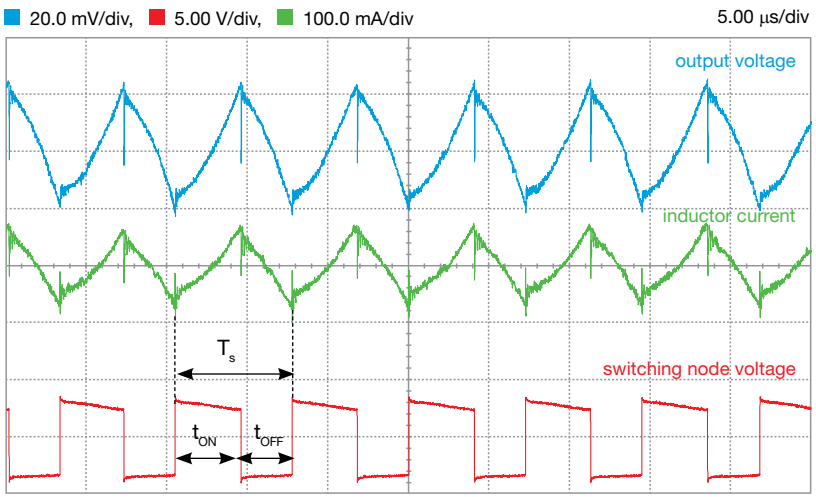

Figure 7. Steady-state operation, V_{in}=5V, I_{out}=0.5A, C_{ff} ON, C_{out}=C_3=100µF, 100mΩ

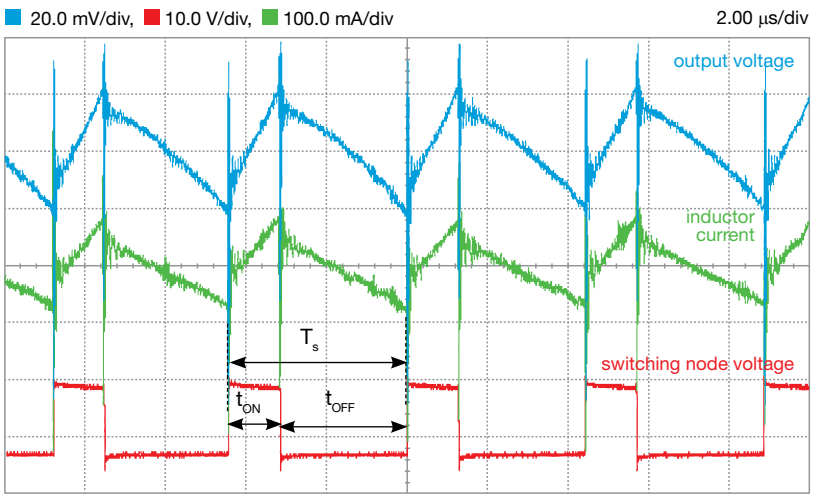

Figure 8. Steady-state operation, V_{in}=10V, I_{out}=0.5A, C_{ff} ON, C_{out}=C_3=100µF, 100mΩ

The plots of Figures 7 and 8 show the change of duty-cycle $D=t_{ON}/T_s$ when the input voltage rises from 5V (Figure 7) to 10V (Figure 8). In particular, the duty-cycle decreases due to a reduction of the MOSFET ON time t_{ON} as a consequence of the inherent operation of the hysteretic buck regulator (notice that the horizontal time scale is 5.00 µs/div in Figure 7 and 2.00 µs/div in Figure 8).

Comparing the LM3475 hysteretic buck regulator operation with the TPS54160 Peak-Current-Control (PCC) buck regulator operation, you can observe that:

- the LM3475 hysteretic buck regulator adjusts the duty-cycle needed to achieve the desired output voltage by changing the MOSFET ON time while keeping the MOSFET OFF time almost constant: therefore, the switching frequency of the hysteretic buck regulator cannot be fixed
- the TPS54160 PCC buck regulator achieves the regulation of the output voltage by changing jointly the MOSFET ON time and OFF time: this is the consequence of the fact that the switching frequency is fixed in the PCC by means of a timing circuitry.

Experimental plots

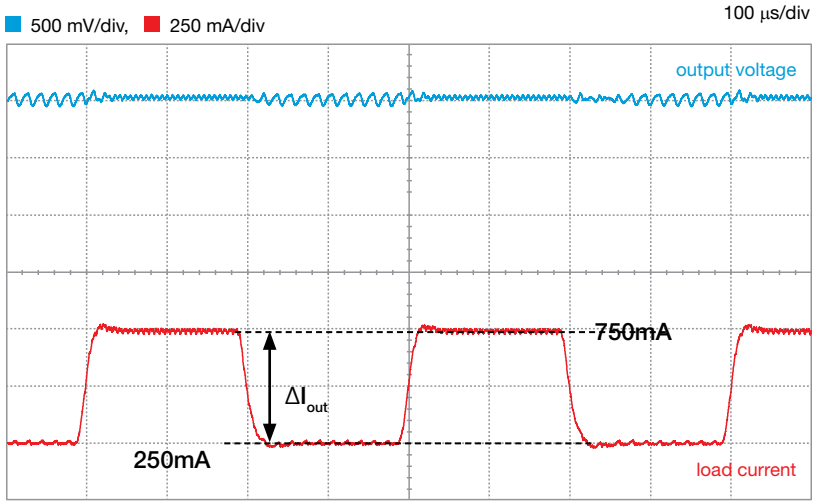

Figure 9. Load-transient operation, V_{in}=5V, I_{out}=250mA↔750mA, C_{ff} ON, C_{out}=C_3=100µF, 100mΩ

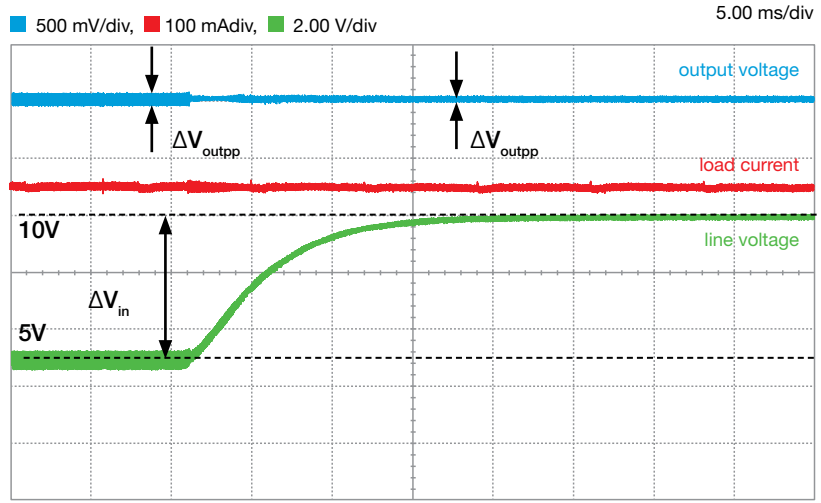

Figure 10. Line-transient operation, V_{in}=5V→10V, I_{out}=250mA, C_{ff} ON, C_{out}=C_3=100µF, 100mΩ

The plot of Figure 9 shows well visible output voltage surges in correspondence of load current step-up and step-down changes. This is determined by the low slew-rate of the load current transients. The higher ripple observed when the regulator operates with low current (250mA) is determined by the discontinuos conduction mode.

The plot of Figure 10 shows the change of the output voltage peak-to-peak ripple magnitude ΔV_{outpp} as a result of the increase of the input voltage (see the output voltage trace). No surges are observed at the instants of the line transients, as a consequence of the good line noise rejection capabilities of the hysteretic buck regulator and of the limited input voltage slew-rate.

While very high load current slew rates can be observed in certain applications, like in Point of Load buck regulators used to supply microprocessors, very high input voltage slew rate are not frequently observed in the real world applications. The input voltage slew rate is limited by the output capacitance of the voltage source feeding the regulator (it can be another power supply whose output capacitor limits the voltage slew-rate), by the parasitic inductance of cables an connections, and by the inductor of possible additional input filters.

Appendix A

References

[1] R. W. Erickson, D. Maksimovic, Fundamentals of Power Electronics, Springer

[2] C. Basso, Designing Control Loops for Linear and Switching Power Supplies: A Tutorial Guide, Artech House

[3] S. Maniktala, Switching Power Supplies A - Z, Newness

[4] A. De Nardo, N. Femia, G. Petrone, G. Spagnuolo, "Optimal Buck Converter Output Filter Design for Point-of-Load Applications", IEEE Trans. on Industrial Electronics, pp. 1330-1341, Vol. 57, N. 4, 2010.

[5] TPS54160 datasheet, http://www.ti.com/lit/ds/symlink/tps54160.pdf

[6] LM3475 datasheet, http://www.ti.com/lit/ds/symlink/lm3475.pdf

[7] F. D. Tan, R. D. Middlebrook, "A unified model for current-programmed converters", IEEE Trans. on Power Electronics, pp. 397 - 408, Vol. 10, No. 4, 1995.

[8] www.mathworks.com

[9] www.omicron-lab.com

Appendix B

Manufacturers websites

ASJ,	*http://www.asj.com.sg/*
AVX,	*http://www.avx.com/*
Bourns,	*http://www.bourns.com*
Coilcraft,	*http://www.coilcraft.com/*
Diodes Incorporated,	*http://www.diodes.com/*
Kemet,	*http://www.kemet.com/*
Murata,	*http://www.murata.com/*
Nippon Chemi-Con,	*http://www.chemi-con.co.jp/*
ON Semiconductor,	*http://www.onsemi.com/*
Panasonic,	*http://industrial.panasonic.com/*
Philips Lumileds,	*http://www.philipslumileds.com/*
Rohm Semiconductor,	*http://www.rohm.com/*
Samsung,	*http://www.samsungsem.com/*
Samwha,	*http://www.samwha.com/*
Taiyo Yuden,	*http://www.t-yuden.com/*
TDK,	*http://product.tdk.com/*
TE Connectivity,	*http://www.te.com/*
Texas Instruments,	*http://www.ti.com/*
TT Electronics,	*http://www.ttelectronics.com*
Vishay,	*http://www.vishay.com/*
Yageo,	*http://www.yageo.com/*

TIuniversityprogram

Texas Instruments has been passionate about creating innovative technology solutions for more than 80 years. The TI University Program was established in 1982 and is a global program operating in 35 countries, multiple languages and impacting over hundreds of thousands of students every year. The TI University Program offers educators discounted tools, lab donations, and teaching materials so students can learn TI technology in the classroom and lab. From teaching materials to design projects, our advanced analog and embedded processing technologies fuel the passions of students and educators in university labs worldwide.

TI-PMLK: Powered by Coilcraft

Coilcraft is the exclusive inductor supplier for all TI-PMLK Educational boards.

Specified parts include:

- LPS5030-103MLB
  LPS5030 Series Low Profile Shielded Power Inductors
- MSS7341-183MLB
  MSS7341 Series Shielded SMT Power Inductors
- XAL4040-153MEB
  XAL40xx Series High Current Shielded Power Inductors

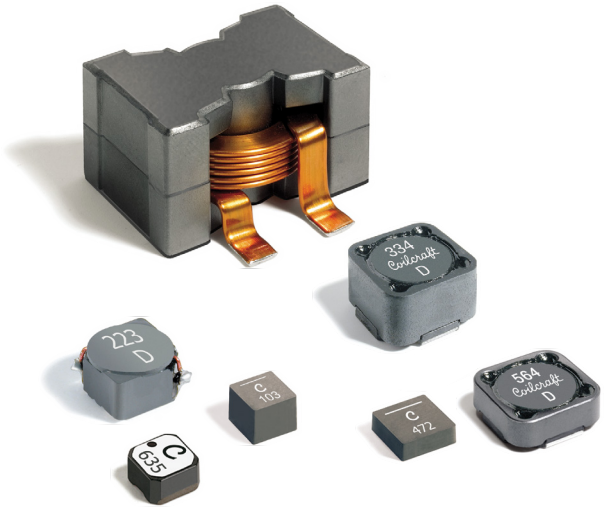

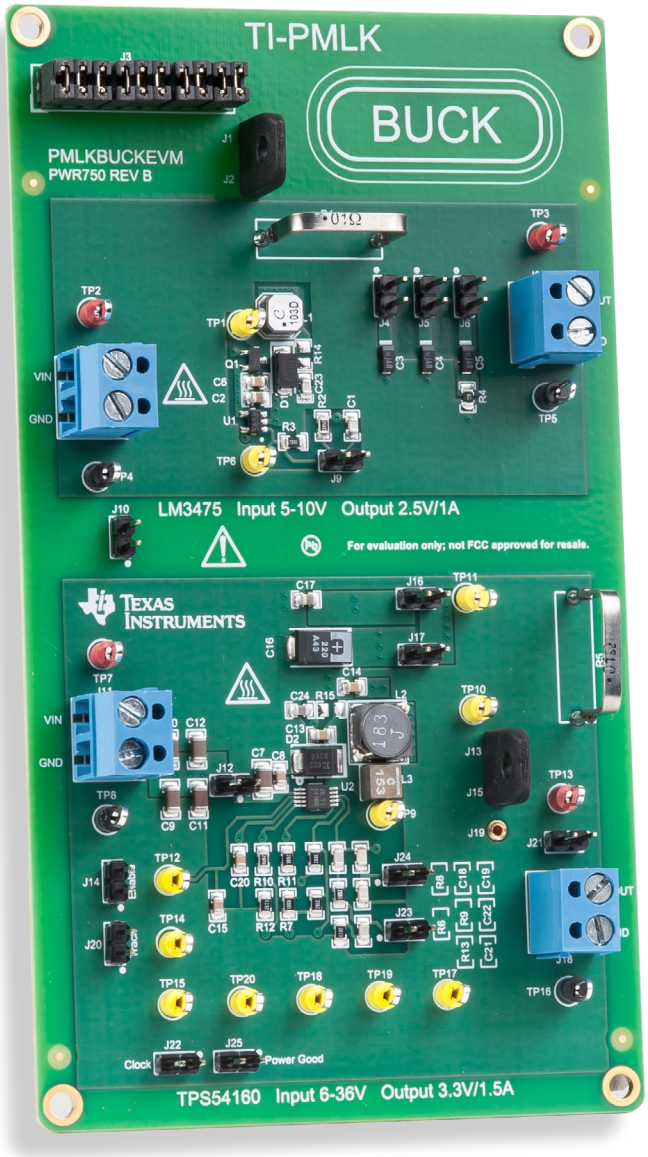

Coilcraft is your RF & Power Magnetic resource

Coilcraft understands that inductors can be difficult for students to understand, so we're committed to upporting you with the same tools and resources professional engineers rely on when designing power management and analog circuits.

Free product samples

Need some Coilcraft parts for your design project? We'll ship them today.

Industry's best design tools

Our powerful on-line tools will lead you to the perfect part quickly and easily.

Application notes

Our App Notes and Design Guides cover topics you might not learn about in class.

Free Power Management Lab Kit

This free parts tool kit helps instructors bring practical experience into the classroom.

Learn more @ Coilcraft.com/students

IMPORTANT NOTICE

TI Power Management Lab Kit ("TI-PMLK") – Buck Experiment Book is intended to introduce students to basic electronic theory and circuits through experiments outlined in this book. While Texas Instruments Incorporated and its subsidiaries (TI) update information periodically, it may not be current at the time you conduct experiments set forth in the book. You understand and agree that you remain responsible for using your independent analysis, evaluation and judgment in conducting experiments contemplated by this book. In addition to the terms below, your use of this book is subject to TI's Terms of Use located at http://www.ti.com/corp/docs/legal/termsofuse.shtml which are incorporated herein by this reference.

THE MATERIAL CONTAINED IN THIS BOOK (THE "CONTENT") IS PROVIDED "AS IS". TI MAKES NO WARRANTIES OR REPRESENTATIONS WITH REGARD TO THIS CONTENT, OR USE OF THIS CONTENT, WHETHER EXPRESS, IMPLIED, OR STATUTORY, INCLUDING ACCURACY OR COMPLETENESS. TI DISCLAIMS ANY WARRANTY OF TITLE AND ANY IMPLIED WARRANTIES OF MERCHANTABILITY, FITNESS FOR A PARTICULAR PURPOSE, QUIET ENJOYMENT, QUIET POSSESSION, AND NON-INFRINGEMENT OF ANY THIRD PARTY INTELLECTUAL PROPERTY RIGHTS WITH REGARD TO THE CONTENT OR THE USE OF THE CONTENT. TI SHALL NOT BE LIABLE FOR ANY ACTUAL, SPECIAL, INCIDENTAL, CONSEQUENTIAL OR INDIRECT DAMAGES, HOWEVER CAUSED, ON ANY THEORY OF LIABILITY AND WHETHER OR NOT TI HAS BEEN ADVISED OF THE POSSIBILITY OF SUCH DAMAGES, ARISING IN ANY WAY OUT OF THE CONTENT OR USE OF THE CONTENT.

Certain books may contain experiments which contemplate the use of materials obtained from third parties and/or other materials that may be linked at www.ti.com. IN ALL SUCH INSTANCES, TI OFFERS NO WARRANTIES (EITHER EXPRESS OR IMPLIED), INDEMNIFICATION, OR SUPPORT OF ANY KIND WITH RESPECT TO THIRD PARTY MATERIALS AND, TO THE EXTENT PERMITTED BY LAW, ALL DISCLAIMERS OF WARRANTIES AND LIMITATIONS OF LIABILITY WITHIN THIS NOTICE WILL APPLY TO THE THIRD PARTY MATERIALS, AS WELL.

STANDARD TERMS AND CONDITIONS FOR EVALUATION MODULES

1. *Delivery: TI delivers TI evaluation boards, kits, or modules, including any accompanying demonstration software, components, or documentation (collectively, an "EVM" or "EVMs") to the User ("User") in accordance with the terms and conditions set forth herein. Acceptance of the EVM is expressly subject to the following terms and conditions.*
   1.1 EVMs are intended solely for product or software developers for use in a research and development setting to facilitate feasibility evaluation, experimentation, or scientific analysis of TI semiconductors products. EVMs have no direct function and are not finished products. EVMs shall not be directly or indirectly assembled as a part or subassembly in any finished product. For clarification, any software or software tools provided with the EVM ("Software") shall not be subject to the terms and conditions set forth herein but rather shall be subject to the applicable terms and conditions that accompany such Software
   1.2 EVMs are not intended for consumer or household use. EVMs may not be sold, sublicensed, leased, rented, loaned, assigned, or otherwise distributed for commercial purposes by Users, in whole or in part, or used in any finished product or production system.

2. *Limited Warranty and Related Remedies/Disclaimers:*
   2.1 These terms and conditions do not apply to Software. The warranty, if any, for Software is covered in the applicable Software License Agreement.
   2.2 TI warrants that the TI EVM will conform to TI's published specifications for ninety (90) days after the date TI delivers such EVM to User. Notwithstanding the foregoing, TI shall not be liable for any defects that are caused by neglect, misuse or mistreatment by an entity other than TI, including improper installation or testing, or for any EVMs that have been altered or modified in any way by an entity other than TI. Moreover, TI shall not be liable for any defects that result from User's design, specifications or instructions for such EVMs. Testing and other quality control techniques are used to the extent TI deems necessary or as mandated by government requirements. TI does not test all parameters of each EVM.
   2.3 If any EVM fails to conform to the warranty set forth above, TI's sole liability shall be at its option to repair or replace such EVM, or credit User's account for such EVM. TI's liability under this warranty shall be limited to EVMs that are returned during the warranty period to the address designated by TI and that are determined by TI not to conform to such warranty. If TI elects to repair or replace such EVM, TI shall have a reasonable time to repair such EVM or provide replacements. Repaired EVMs shall be warranted for the remainder of the original warranty period. Replaced EVMs shall be warranted for a new full ninety (90) day warranty period.

3. *Regulatory Notices:*
   3.1 United States
      3.1.1 *Notice applicable to EVMs not FCC-Approved:*
      This kit is designed to allow product developers to evaluate electronic components, circuitry, or software associated with the kit to determine whether to incorporate such items in a finished product and software developers to write software applications for use with the end product. This kit is not a finished product and when assembled may not be resold or otherwise marketed unless all required FCC equipment authorizations are first obtained. Operation is subject to the condition that this product not cause harmful interference to licensed radio stations and that this product accept harmful interference. Unless the assembled kit is designed to operate under part 15, part 18 or part 95 of this chapter, the operator of the kit must operate under the authority of an FCC license holder or must secure an experimental authorization under part 5 of this chapter.
      3.1.2 *For EVMs annotated as FCC – FEDERAL COMMUNICATIONS COMMISSION Part 15 Compliant:*

CAUTION

This device complies with part 15 of the FCC Rules. Operation is subject to the following two conditions: (1) This device may not cause harmful interference, and (2) this device must accept any interference received, including interference that may cause undesired operation.

Changes or modifications not expressly approved by the party responsible for compliance could void the user's authority to operate the equipment.

FCC Interference Statement for Class A EVM devices

NOTE: This equipment has been tested and found to comply with the limits for a Class A digital device, pursuant to part 15 of the FCC Rules. These limits are designed to provide reasonable protection against harmful interference when the equipment is operated in a commercial environment. This equipment generates, uses, and can radiate radio frequency energy and, if not installed and used in accordance with the instruction manual, may cause harmful interference to radio communications. Operation of this equipment in a residential area is likely to cause harmful interference in which case the user will be required to correct the interference at his own expense.

FCC Interference Statement for Class B EVM devices

NOTE: This equipment has been tested and found to comply with the limits for a Class B digital device, pursuant to part 15 of the FCC Rules. These limits are designed to provide reasonable protection against harmful interference in a residential installation. This equipment generates, uses and can radiate radio frequency energy and, if not installed and used in accordance with the instructions, may cause harmful interference to radio communications. However, there is no guarantee that interference will not occur in a particular installation. If this equipment does cause harmful interference to radio or television reception, which can be determined by turning the equipment off and on, the user is encouraged to try to correct the interference by one or more of the following measures:

- *Reorient or relocate the receiving antenna.*
- *ncrease the separation between the equipment and receiver.*
- *Connect the equipment into an outlet on a circuit different from that to which the receiver is connected.*
- *Consult the dealer or an experienced radio/TV technician for help.*

3.2 Canada

3.2.1 For EVMs issued with an Industry Canada Certificate of Conformance to RSS-210

Concerning EVMs Including Radio Transmitters:

This device complies with Industry Canada license-exempt RSS standard(s). Operation is subject to the following two conditions: (1) this device may not cause interference, and (2) this device must accept any interference, including interference that may cause undesired operation of the device.

Concernant les EVMs avec appareils radio:

Le présent appareil est conforme aux CNR d'Industrie Canada applicables aux appareils radio exempts de licence. L'exploitation est autorisée aux deux conditions suivantes: (1) l'appareil ne doit pas produire de brouillage, et (2) l'utilisateur de l'appareil doit accepter tout brouillage radioélectrique subi, même si le brouillage est susceptible d'en compromettre le fonctionnement.

Concerning EVMs Including Detachable Antennas:

Under Industry Canada regulations, this radio transmitter may only operate using an antenna of a type and maximum (or lesser) gain approved for the transmitter by Industry Canada. To reduce potential radio interference to other users, the antenna type and its gain should be so chosen that the equivalent isotropically radiated power (e.i.r.p.) is not more than that necessary for successful communication. This radio transmitter has been approved by Industry Canada to operate with the antenna types listed in the user guide with the maximum permissible gain and required antenna impedance for each antenna type indicated. Antenna types not included in this list, having a gain greater than the maximum gain indicated for that type, are strictly prohibited for use with this device.

Concernant les EVMs avec antennes détachables

Conformément à la réglementation d'Industrie Canada, le présent émetteur radio peut fonctionner avec une antenne d'un type et d'un gain maximal (ou inférieur) approuvé pour l'émetteur par Industrie Canada. Dans le but de réduire les risques de brouillage radioélectrique à l'intention des autres utilisateurs, il faut choisir le type d'antenne et son gain de sorte que la puissance isotrope rayonnée équivalente (p.i.r.e.) ne dépasse pas l'intensité nécessaire à l'établissement d'une communication satisfaisante. Le présent émetteur radio a été approuvé par Industrie Canada pour fonctionner avec les types d'antenne énumérés dans le manuel d'usage et ayant un gain admissible maximal et l'impédance requise pour chaque type d'antenne. Les types d'antenne non inclus dans cette liste, ou dont le gain est supérieur au gain maximal indiqué, sont strictement interdits pour l'exploitation de l'émetteur

3.3 *Japan*

3.3.1 Notice for EVMs delivered in Japan: Please see http://www.tij.co.jp/lsds/ti_ja/general/eStore/notice_01.page 日本国内に輸入される評価用キット、ボードについては、次のところをご覧ください。http://www.tij.co.jp/lsds/ti_ja/general/eStore/notice_01.page

3.3.2 Notice for Users of EVMs Considered "Radio Frequency Products" in Japan: EVMs entering Japan may not be certified by TI as conforming to Technical Regulations of Radio Law of Japan. If User uses EVMs in Japan, not certified to Technical Regulations of Radio Law of Japan, User is required by Radio Law of

Japan to follow the instructions below with respect to EVMs:

1. Use EVMs in a shielded room or any other test facility as defined in the notification #173 issued by Ministry of Internal Affairs and Communications on March 28, 2006, based on Sub-section 1.1 of Article 6 of the Ministry's Rule for Enforcement of Radio Law of Japan,
2. Use EVMs only after User obtains the license of Test Radio Station as provided in Radio Law of Japan with respect to EVMs, or
3. Use of EVMs only after User obtains the Technical Regulations Conformity Certification as provided in Radio Law of Japan with respect to EVMs. Also, do not transfer EVMs, unless User gives the same notice above to the transferee. Please note that if User does not follow the instructions above, User will be subject to penalties of Radio Law of Japan.

【無線電波を送信する製品の開発キットをお使いになる際の注意事項】開発キットの中には技術基準適合証明を受けていないものがあります。技術適合証明を受けていないもののご使用に際しては、電波法遵守のため、以下のいずれかの措置を取っていただく必要がありますのでご注意ください。

1. 電波法施行規則第6条第1項第1号に基づく平成18年3月28日総務省告示第173号で定められた電波暗室等の試験設備でご使用いただく。
2. 実験局の免許を取得後ご使用いただく。
3. 技術基準適合証明を取得後ご使用いただく。なお、本製品は、上記の「ご使用にあたっての注意」を譲渡先、移転先に通知しない限り、譲渡、移転できないものとします。上記を遵守頂けない場合は、電波法の罰則が適用される可能性があることをご留意ください。日本テキサス・インスツルメンツ株式会社

東京都新宿区西新宿６丁目２４番１号
西新宿三井ビル

3.3.3 Notice for EVMs for Power Line Communication: Please see http://www.tij.co.jp/lsds/ti_ja/general/eStore/notice_02.page
電力線搬送波通信についての開発キットをお使いになる際の注意事項については、次のところをご覧ください。 http://www.tij.co.jp/lsds/ti_ja/general/eStore/notice_02.page

4. *EVM Use Restrictions and Warnings:*

4.1 EVMS ARE NOT FOR USE IN FUNCTIONAL SAFETY AND/OR SAFETY CRITICAL EVALUATIONS, INCLUDING BUT NOT LIMITED TO EVALUATIONS OF LIFE SUPPORT APPLICATIONS.

4.2 User must read and apply the user guide and other available documentation provided by TI regarding the EVM prior to handling or using the EVM, including without limitation any warning or restriction notices. The notices contain important safety information related to, for example, temperatures and voltages.

4.3 Safety-Related Warnings and Restrictions:

4.3.1 User shall operate the EVM within TI's recommended specifications and environmental considerations stated in the user guide, other available documentation provided by TI, and any other applicable requirements and employ reasonable and customary safeguards. Exceeding the specified performance ratings and specifications (including but not limited to input and output voltage, current, power, and environmental ranges) for the EVM may cause personal injury or death, or property damage. If there are questions concerning performance ratings and specifications, User should contact a TI field representative prior to connecting interface electronics including input power and intended loads. Any loads applied outside of the specified output range may also result in unintended and/or inaccurate operation and/or possible permanent damage to the EVM and/or interface electronics. Please consult the EVM user guide prior to connecting any load to the EVM output. If there is uncertainty as to the load specification, please contact a TI field representative. During normal operation, even with the inputs and outputs kept within the specified allowable ranges, some circuit components may have elevated case temperatures. These components include but are not limited to linear regulators, switching transistors, pass transistors, current sense resistors, and heat sinks, which can be identified using the information in the associated documentation. When working with the EVM, please be aware that the EVM may become very warm.

4.3.2 EVMs are intended solely for use by technically qualified, professional electronics experts who are familiar with the dangers and application risks associated with handling electrical mechanical components, systems, and subsystems. User assumes all responsibility and liability for proper and safe handling and use of the EVM by User or its employees, affiliates, contractors or designees. User assumes all responsibility and liability to ensure that any interfaces (electronic and/or mechanical) between the EVM and any human body are designed with suitable isolation and means to safely limit accessible leakage currents to minimize the risk of electrical shock hazard. User assumes all responsibility and liability for any improper or unsafe handling or use of the EVM by User or its employees, affiliates, contractors or designees.

4.4 User assumes all responsibility and liability to determine whether the EVM is subject to any applicable international, federal, state, or local laws and regulations related to User's handling and use of the EVM and, if applicable, User assumes all responsibility and liability for compliance in all respects with such laws and regulations. User assumes all responsibility and liability for proper disposal and recycling of the EVM consistent with all applicable international, federal, state, and local requirements.

5. *Accuracy of Information:* To the extent TI provides information on the availability and function of EVMs, TI attempts to be as accurate as possible. However, TI does not warrant the accuracy of EVM descriptions, EVM availability or other information on its websites as accurate, complete, reliable, current, or error-free.

6. *Disclaimers:*
   6.1 EXCEPT AS SET FORTH ABOVE, EVMS AND ANY WRITTEN DESIGN MATERIALS PROVIDED WITH THE EVM (AND THE DESIGN OF THE EVM ITSELF) ARE PROVIDED "AS IS" AND "WITH ALL FAULTS." TI DISCLAIMS ALL OTHER WARRANTIES, EXPRESS OR IMPLIED, REGARDING SUCH ITEMS, INCLUDING BUT NOT LIMITED TO ANY IMPLIED WARRANTIES OF MERCHANTABILITY OR FITNESS FOR A PARTICULAR PURPOSE OR NON-INFRINGEMENT OF ANY THIRD PARTY PATENTS, COPYRIGHTS, TRADE SECRETS OR OTHER INTELLECTUAL PROPERTY RIGHTS.
   6.2 EXCEPT FOR THE LIMITED RIGHT TO USE THE EVM SET FORTH HEREIN, NOTHING IN THESE TERMS AND CONDITIONS SHALL BE CONSTRUED AS GRANTING OR CONFERRING ANY RIGHTS BY LICENSE, PATENT, OR ANY OTHER INDUSTRIAL OR INTELLECTUAL PROPERTY RIGHT OF TI, ITS SUPPLIERS/LICENSORS OR ANY OTHER THIRD PARTY, TO USE THE EVM IN ANY FINISHED END-USER OR READY-TO-USE FINAL PRODUCT, OR FOR ANY INVENTION, DISCOVERY OR IMPROVEMENT MADE, CONCEIVED OR ACQUIRED PRIOR TO OR AFTER DELIVERY OF THE EVM.

7. *USER'S INDEMNITY OBLIGATIONS AND REPRESENTATIONS.* USER WILL DEFEND, INDEMNIFY AND HOLD TI, ITS LICENSORS AND THEIR REPRESENTATIVES HARMLESS FROM AND AGAINST ANY AND ALL CLAIMS, DAMAGES, LOSSES, EXPENSES, COSTS AND LIABILITIES (COLLECTIVELY, "CLAIMS") ARISING OUT OF OR IN CONNECTION WITH ANY HANDLING OR USE OF THE EVM THAT IS NOT IN ACCORDANCE WITH THESE TERMS AND CONDITIONS. THIS OBLIGATION SHALL APPLY WHETHER CLAIMS ARISE UNDER STATUTE, REGULATION, OR THE LAW OF TORT, CONTRACT OR ANY OTHER LEGAL THEORY, AND EVEN IF THE EVM FAILS TO PERFORM AS DESCRIBED OR EXPECTED.

8. *Limitations on Damages and Liability:*
   8.1 General Limitations. IN NO EVENT SHALL TI BE LIABLE FOR ANY SPECIAL, COLLATERAL, INDIRECT, PUNITIVE, INCIDENTAL, CONSEQUENTIAL, OR EXEMPLARY DAMAGES IN CONNECTION WITH OR ARISING OUT OF THESE TERMS ANDCONDITIONS OR THE USE OF THE EVMS PROVIDED HEREUNDER, REGARDLESS OF WHETHER TI HAS BEEN ADVISED OF THE POSSIBILITY OF SUCH DAMAGES. EXCLUDED DAMAGES INCLUDE, BUT ARE NOT LIMITED TO, COST OF REMOVAL OR REINSTALLATION, ANCILLARY COSTS TO THE PROCUREMENT OF SUBSTITUTE GOODS OR SERVICES, RETESTING, OUTSIDE COMPUTER TIME, LABOR COSTS, LOSS OF GOODWILL, LOSS OF PROFITS, LOSS OF SAVINGS, LOSS OF USE, LOSS OF DATA, OR BUSINESS INTERRUPTION. NO CLAIM, SUIT OR ACTION SHALL BE BROUGHT AGAINST TI MORE THAN ONE YEAR AFTER THE RELATED CAUSE OF ACTION HAS OCCURRED.
   8.2 Specific Limitations. IN NO EVENT SHALL TI'S AGGREGATE LIABILITY FROM ANY WARRANTY OR OTHER OBLIGATION ARISING OUT OF OR IN CONNECTION WITH THESE TERMS AND CONDITIONS, OR ANY USE OF ANY TI EVM PROVIDED HEREUNDER, EXCEED THE TOTAL AMOUNT PAID TO TI FOR THE PARTICULAR UNITS SOLD UNDER THESE TERMS AND CONDITIONS WITH RESPECT TO WHICH LOSSES OR DAMAGES ARE CLAIMED. THE EXISTENCE OF MORE THAN ONE CLAIM AGAINST THE PARTICULAR UNITS SOLD TO USER UNDER THESE TERMS AND CONDITIONS SHALL NOT ENLARGE OR EXTEND THIS LIMIT.

9. *Return Policy.* Except as otherwise provided, TI does not offer any refunds, returns, or exchanges. Furthermore, no return of EVM(s) will be accepted if the package has been opened and no return of the EVM(s) will be accepted if they are damaged or otherwise not in a resalable condition. If User feels it has been incorrectly charged for the EVM(s) it ordered or that delivery violates the applicable order, User should contact TI. All refunds will be made in full within thirty (30) working days from the return of the components(s), excluding any postage or packaging costs.

10. *Governing Law:* These terms and conditions shall be governed by and interpreted in accordance with the laws of the State of Texas, without reference to conflict-of-laws principles. User agrees that non-exclusive jurisdiction for any dispute arising out of or relating to these terms and conditions lies within courts located in the State of Texas and consents to venue in Dallas County, Texas. Notwithstanding the foregoing, any judgment may be enforced in any United States or foreign court, and TI may seek injunctive relief in any United States or foreign court.

Mailing Address: Texas Instruments, Post Office Box 655303, Dallas, Texas 75265
Copyright © 2017, Texas Instruments Incorporated

Texas Instruments

TI-PMLK

TI Power Management Lab Kit
Buck Experiment Book

The platform bar is a trademark of Texas Instruments. © 2017 Texas Instruments Incorporated.

SSQU07B
PMLKBuckEVM REV B

IMPORTANT NOTICE FOR TI DESIGN INFORMATION AND RESOURCES

Texas Instruments Incorporated ('TI") technical, application or other design advice, services or information, including, but not limited to, reference designs and materials relating to evaluation modules, (collectively, "TI Resources") are intended to assist designers who are developing applications that incorporate TI products; by downloading, accessing or using any particular TI Resource in any way, you (individually or, if you are acting on behalf of a company, your company) agree to use it solely for this purpose and subject to the terms of this Notice.

TI's provision of TI Resources does not expand or otherwise alter TI's applicable published warranties or warranty disclaimers for TI products, and no additional obligations or liabilities arise from TI providing such TI Resources. TI reserves the right to make corrections, enhancements, improvements and other changes to its TI Resources.

You understand and agree that you remain responsible for using your independent analysis, evaluation and judgment in designing your applications and that you have full and exclusive responsibility to assure the safety of your applications and compliance of your applications (and of all TI products used in or for your applications) with all applicable regulations, laws and other applicable requirements. You represent that, with respect to your applications, you have all the necessary expertise to create and implement safeguards that (1) anticipate dangerous consequences of failures, (2) monitor failures and their consequences, and (3) lessen the likelihood of failures that might cause harm and take appropriate actions. You agree that prior to using or distributing any applications that include TI products, you will thoroughly test such applications and the functionality of such TI products as used in such applications. TI has not conducted any testing other than that specifically described in the published documentation for a particular TI Resource.

You are authorized to use, copy and modify any individual TI Resource only in connection with the development of applications that include the TI product(s) identified in such TI Resource. NO OTHER LICENSE, EXPRESS OR IMPLIED, BY ESTOPPEL OR OTHERWISE TO ANY OTHER TI INTELLECTUAL PROPERTY RIGHT, AND NO LICENSE TO ANY TECHNOLOGY OR INTELLECTUAL PROPERTY RIGHT OF TI OR ANY THIRD PARTY IS GRANTED HEREIN, including but not limited to any patent right, copyright, mask work right, or other intellectual property right relating to any combination, machine, or process in which TI products or services are used. Information regarding or referencing third-party products or services does not constitute a license to use such products or services, or a warranty or endorsement thereof. Use of TI Resources may require a license from a third party under the patents or other intellectual property of the third party, or a license from TI under the patents or other intellectual property of TI.

TI RESOURCES ARE PROVIDED "AS IS" AND WITH ALL FAULTS. TI DISCLAIMS ALL OTHER WARRANTIES OR REPRESENTATIONS, EXPRESS OR IMPLIED, REGARDING TI RESOURCES OR USE THEREOF, INCLUDING BUT NOT LIMITED TO ACCURACY OR COMPLETENESS, TITLE, ANY EPIDEMIC FAILURE WARRANTY AND ANY IMPLIED WARRANTIES OF MERCHANTABILITY, FITNESS FOR A PARTICULAR PURPOSE, AND NON-INFRINGEMENT OF ANY THIRD PARTY INTELLECTUAL PROPERTY RIGHTS.

TI SHALL NOT BE LIABLE FOR AND SHALL NOT DEFEND OR INDEMNIFY YOU AGAINST ANY CLAIM, INCLUDING BUT NOT LIMITED TO ANY INFRINGEMENT CLAIM THAT RELATES TO OR IS BASED ON ANY COMBINATION OF PRODUCTS EVEN IF DESCRIBED IN TI RESOURCES OR OTHERWISE. IN NO EVENT SHALL TI BE LIABLE FOR ANY ACTUAL, DIRECT, SPECIAL, COLLATERAL, INDIRECT, PUNITIVE, INCIDENTAL, CONSEQUENTIAL OR EXEMPLARY DAMAGES IN CONNECTION WITH OR ARISING OUT OF TI RESOURCES OR USE THEREOF, AND REGARDLESS OF WHETHER TI HAS BEEN ADVISED OF THE POSSIBILITY OF SUCH DAMAGES.

You agree to fully indemnify TI and its representatives against any damages, costs, losses, and/or liabilities arising out of your non-compliance with the terms and provisions of this Notice.

This Notice applies to TI Resources. Additional terms apply to the use and purchase of certain types of materials, TI products and services. These include; without limitation, TI's standard terms for semiconductor products http://www.ti.com/sc/docs/stdterms.htm), evaluation modules, and samples (http://www.ti.com/sc/docs/sampterms.htm).

Mailing Address: Texas Instruments, Post Office Box 655303, Dallas, Texas 75265
Copyright © 2018, Texas Instruments Incorporated